STR-DE675

SERVICE MANUAL

Ver 1.0 2001. 03

US Model
Canadian Model
AEP Model
UK Model
E Model
Australian Model
Chinese Model

Photo : GOLD

Dolby Laboratories Licensing Corporation.
"DOLBY" the double-D symbol "AC-3" and "PRO LOGIC"
are trademarks of Dolby Laboratories Licensing Corporation.

SPECIFICATIONS

AUDIO POWER SPECIFICATIONS

POWER OUTPUT AND TOTAL HARMONIC DISTORTION:
With 8 ohm loads, both channels driven, from 20 - 20,000 Hz; rated 100 watts per channel minimum RMS power, with no more than 0.09% total harmonic distortion from 250 milliwatts to rated output (USA model only).

Amplifier section

US, Canadian MODELS
Rated Power Output at Stereo mode
(8 ohms 20 Hz - 20 kHz, THD 0.09%)
100 W + 100 W

Reference Power Output
(8 ohms at 1 kHz, THD 0.7%)
Front[1]: 100 W/ch
Center[1]: 100 W
Surround[1]: 100 W/ch

AEP, UK MODEL :
Rated Power Output at Stereo mode
(8 ohms 1 Hz, THD 0.7%)
100 W + 100 W

Reference Power Output
(8 ohms 1 kHz, THD 0.7%)
Front : 100 W/ch
Center : 100 W
Surround : 100 W/ch

Chinese MODEL :
Rated Power Output at Stereo mode
(8 ohms 1 Hz, THD 0.7%)
90 W + 90 W
(at 220 V AC, 50 Hz)
100 W + 100 W
(at 110 V AC, 50 Hz)

Reference Power Output
(8 ohms 1 kHz, THD 10% at 230 V AC, 50 Hz)
Front : 100 W/ch
Center : 100 W
Surround : 100 W/ch

Rated Power Output at Stereo mode
(8 ohms 1 Hz, THD 0.7%)
100 W + 100 W
(at 110 V AC, 50 Hz)

Reference Power Output
(8 ohms 1 kHz, THD 10% at 110 V AC, 50 Hz)
Front : 100 W/ch
Center : 100 W
Surround : 100 W/ch

Others :
Rated Power Output at Stereo mode
(8 ohms 1 Hz, THD 0.7%)
100 W + 100 W

Reference Power Output
(8 ohms 1 kHz, THD 10%)
Front : 110 W/ch
Center : 110 W
Surround : 110 W/ch

1) Depending on the sound field settings and sources, there may be no sound output.

Frequency response
MULTI CH IN, CD, MD/TAPE, DVD/LD, TV/SAT, VIDEO 1**, VIDEO 2**, AUX: 10 Hz - 50 kHz +0.5/–2 dB (with sound field and equalizer bypassed)

— Continued on next page —

FM STEREO FM-AM RECEIVER

9-873-845-11
2001C1600-1
© 2001.3

Sony Corporation
Audio Entertainment Group
General Engineering Dept.

SONY®

Inputs (Analog)
MULTI CH IN, CD, DVD/LD, MD/TAPE, TV/SAT, VIDEO 1**, VIDEO 2**, AUX:
Sensitivity: 250 mV
Impedance: 50 kilohms
S/N[a]: 96 dB (A, 250 mV[b])

a) Input short.
b) Weighted network, input level.

Inputs (Digital)
DVD/LD (coaxial):
Sensitivity: –
Impedance: 75 ohms
S/N: 100 dB (A, 20 kHz LPF)
DVD/LD, TV/SAT, MD/TAPE** (Optical):
Sensitivity: –
Impedance: –
S/N: 100 dB (A, 20 kHz LPF)

Outputs MD/TAPE, (OUT); VIDEO 1**, VIDEO 2** (AUDIO OUT):
Voltage: 250 mV,
Impedance: 10 kilohms
SUB WOOFER:
Voltage: 2 V
Impedance: 1 kilohms
PHONES:
Accepts low- and high-impedance headphones

EQ ±6 dB

Sampling Frequency
48 kHz (TV/SAT, MD/TAPE OPTICAL IN)
96 kHz (DVD/LD OPTICAL IN, COAXIAL IN)

FM tuner section

Tuning range 87.5 - 108.0 MHz

Antenna terminals
75 ohms, unbalanced

Intermediate frequency
10.7 MHz

Sensitivity Mono: 18.3 dBf, 2.2 µV/75 ohms
Stereo: 38.3 dBf 22.5 µV/75 ohms

Usable sensitivity
11.2 dBf, 1 µV/75 ohms

S/N Mono: 76 dB
Stereo: 70 dB

Harmonic distortion at 1 kHz
Mono: 0.3%
Stereo: 0.5%

Separation 45 dB at 1 kHz

Frequency response
30 Hz - 15 kHz +0.5/–2 dB

Selectivity 60 dB at 400 kHz

AM tuner section

US, Canadian MODELS :
Tuning range With 10-kHz tuning scale: 530 - 1710 kHz[c]
With 9-kHz tuning scale: 531 - 1710 kHz[c]

AEP, UK MODELS :
Tuning range 531 - 1602 kHz

Others :
Tuning range 530 - 1610 kHz (10 kHz step)
531 - 1602 kHz (9 kHz step)
530 - 1610 kHz (10 kHz step)[c]
531 - 1602 kHz (9 kHz step) [c]

Antenna Loop antenna

Intermediate frequency
450 kHz

Usable sensitivity
50 dB/m (at 1,000 kHz or 999 kHz)

S/N 54 dB (at 50 mV/m)

Harmonic distortion
0.5 % (50 mV/m, 400 kHz)

Selectivity At 9 kHz: 35 dB
At 10 kHz: 40 dB

c) You can change the AM tuning interval to 9 kHz. After tuning in any AM station, turn off the receiver. Hold down the TUNING + button and press the I/⏻ button. All preset stations will be erased when you change the tuning interval. To reset the scale to 10 kHz, repeat the procedure.

Video section

Inputs Video: 1 Vp-p 75 ohms
S-video***:
Y: 1 Vp-p 75 ohms
C: 0.286 Vp-p 75 ohms

Outputs Video: 1 Vp-p 75 ohms
S-video***:
Y: 1 Vp-p 75 ohms
C: 0.286 Vp-p 75 ohms

General

System Tuner section:
PLL quartz-locked digital synthesizer system
Preamplifier section:
Low-noise NF type equalizer
Power amplifier section:
Pure-complementary SEPP

Power requirements
US, Canadian MODEL :
120 V AC, 60 Hz
AEP, UK MODELS :
230 V AC, 50/60 Hz
E MODEL : 120/220/240 V AC, 50/60 Hz
Taiwan MODEL :
110 V AC, 50/60 Hz
Mexican MODEL :
120 V AC, 60 Hz
Australian MODEL :
240 V AC, 50 Hz

Power consumption
US MODEL : 220W
In standby condition: 1 W
Canadian MODEL :
315 VA
In standby condition: 1 W
AEP, UK MODELS :
210 W
In standby condition: 1 W
E MODEL : 230 W
In standby condition: 1 W
Mexican MODEL :
220 W
In standby condition: 1 W

AC outlets
US, Canadian MODELS :
1 switched, total 120 W/1A Max
Others : 1 switched, total 100 W Max

Dimensions 430 × 308.5 × 157.5 mm (14.5 × 10.4 × 5.3 in.)
including projecting parts and controls

Mass (Approx.)
7.5 kg (16 lbs. 9 oz.)

Supplied accessories
- FM wire antenna (1)
- AM loop antenna (1)
- R6 (size-AA) batteries (2)
- Remote commander RM-PP505 (remote) (1)

Design and specifications are subject to change without notice.

SAFETY CHECK-OUT

After correcting the original service problem, perform the following safety checks before releasing the set to the customer: Check the antenna terminals, metal trim, "metallized" knobs, screws, and all other exposed metal parts for AC leakage. Check leakage as described below.

LEAKAGE

The AC leakage from any exposed metal part to earth ground and from all exposed metal parts to any exposed metal part having a return to chassis, must not exceed 0.5 mA (500 microamperes). Leakage current can be measured by any one of three methods.

1. A commercial leakage tester, such as the Simpson 229 or RCA WT-540A. Follow the manufacturers' instructions to use these instruments.

2. A battery-operated AC milliammeter. The Data Precision 245 digital multimeter is suitable for this job.

3. Measuring the voltage drop across a resistor by means of a VOM or battery-operated AC voltmeter. The "limit" indication is 0.75 V, so analog meters must have an accurate low-voltage scale. The Simpson 250 and Sanwa SH-63Trd are examples of a passive VOM that is suitable. Nearly all battery operated digital multimeters that have a 2V AC range are suitable. (See Fig. A)

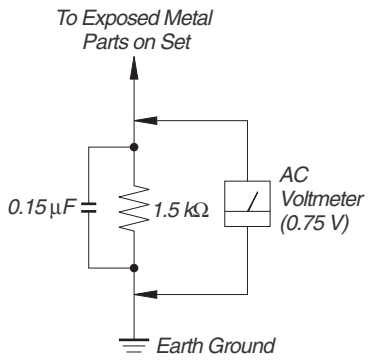

Fig. A. Using an AC voltmeter to check AC leakage.

MODEL IDENTIFICATION
— BACK PANEL —

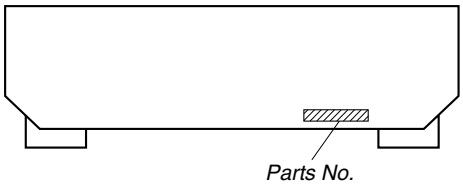

MODEL	PARTS No.
US model	4-232-251-0□
Canadian model	4-232-251-1□
E model	4-232-251-2□
AEP model	4-232-251-3□
UK model	4-232-251-4□
Australian model	4-232-251-5□
Malaysia, Singapore model	4-232-251-6□
Chinese model	4-232-251-7□
Taiwan model	4-232-251-8□
Korean model	4-234-509-0□
Mexican model	4-234-509-1□
Argentina model	4-234-509-2□

与安全有关的零部件须知

在原理图上用阴影及 ⚠ 标记来识别的零部件在安全操作上是具有关键性的。这些零部件要用本手册中所示的部件号对应的索尼零部件进行更换。

在安全操作上具有关键性的电路调整与索尼公司出版的维修手册完全一致。在更换关键零部件时或怀疑动作失常时，请进行这些调整操作。

SAFETY-RELATED COMPONENT WARNING!!

COMPONENTS IDENTIFIED BY MARK ⚠ OR DOTTED LINE WITH MARK ⚠ ON THE SCHEMATIC DIAGRAMS AND IN THE PARTS LIST ARE CRITICAL TO SAFE OPERATION. REPLACE THESE COMPONENTS WITH SONY PARTS WHOSE PART NUMBERS APPEAR AS SHOWN IN THIS MANUAL OR IN SUPPLEMENTS PUBLISHED BY SONY.

ATTENTION AU COMPOSANT AYANT RAPPORT À LA SÉCURITÉ!

LES COMPOSANTS IDENTIFÉS PAR UNE MARQUE ⚠ SUR LES DIAGRAMMES SCHÉMATIQUES ET LA LISTE DES PIÈCES SONT CRITIQUES POUR LA SÉCURITÉ DE FONCTIONNEMENT. NE REMPLACER CES COMPOSANTS QUE PAR DES PIÈSES SONY DONT LES NUMÉROS SONT DONNÉS DANS CE MANUEL OU DANS LES SUPPÉMENTS PUBLIÉS PAR SONY.

TABLE OF CONTENTS

1. GENETAL 5

2. TEST MODE 7

3. DIAGRAMS
3-1. Circuit Boards Location 9
3-2. Block Diagrams 10
• Main Section 10
• Power Section 11
3-3. Printed Wiring Board – Digital Section – 12
3-4. Schematic Diagram – Digital Section (1/3) – 13
3-5. Schematic Diagram – Digital Section (2/3) – 14
3-6. Schematic Diagram – Digital Section (3/3) – 15
3-7. Printed Wiring Board – Main Section – 16
3-8. Schematic Diagram – Main Section (1/3) – 17
3-9. Schematic Diagram – Main Section (2/3) – 18
3-10. Schematic Diagram – Main Section (3/3) – 19
3-11. Printed Wiring Board – Display Section – 20
3-12. Schematic Diagram – Display Section – 21
3-13. Printed Wiring Board – Video Section – 22
3-14. Schematic Diagram – Video Section – 23
3-15. Schematic Diagram – Trans Section – 24
3-16. IC Block Diagrams 25
3-17. IC Pin Function Description 27

4. EXPLODEO VIEWS
4-1. Front Panel Section 29
4-2. Chassis Section 30

5. ELECTRICAL PARTS LIST 32

SECTION 1
GENERAL

This section is extracted from instruction manual.

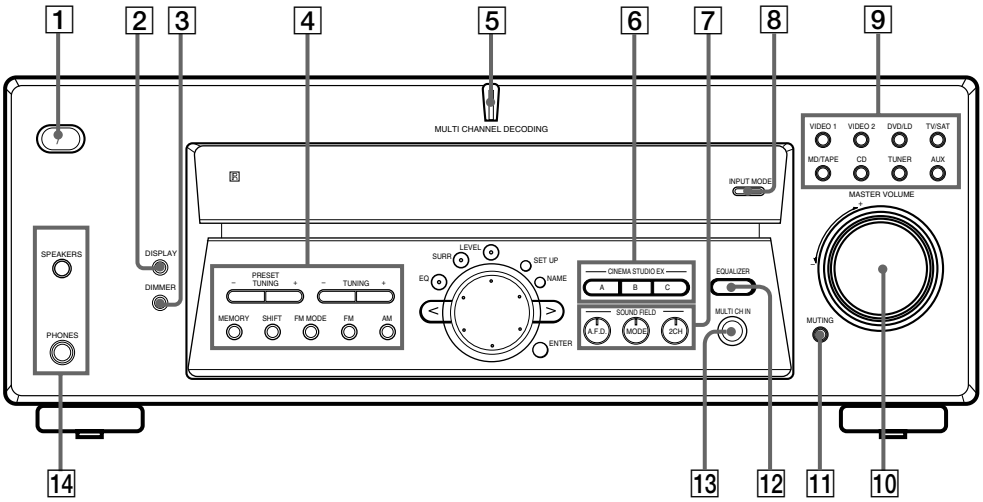

1 I/⏻ switch
Press to turn the receiver on and off.

2 DISPLAY button
Press repeatedly to change the information on the display window as follows:

Index name of the component or the preset station*
↓
FUNCTION button indication or frequency**
↓
Sound field applied to the program source

* *Index name appears only when you have assigned one to the component or preset station (see page 41). Index name does not appear when only blank spaces have been entered, or it is the same as the function button.*
** *Frequency appears only when the tuner is selected.*

3 DIMMER button
Press repeatedly to adjust the brightness of the display. When you want to turn off the display, set in the "DIM.RANGE" parameter in the SET UP menu (page 45).

4 The following buttons operate the built-in tuner. For details, see "Receiving Broadcasts" starting from page 38.

PRESET TUNING +/– buttons
Scan all preset stations.

TUNING +/- buttons
Scan all the available radio stations.

MEMORY button
Press to memorize a preset station.

SHIFT button
Selects a memory page for preset stations.

FM MODE button (AEP, UK, Argentina model only)
If "STEREO" flashes in the display and the FM stereo reception is poor, press this button. You will not have the stereo effect but the sound is improved.

FM button
Selects the FM band.

AM button
Selects the AM band.

5 MULTI CHANNEL DECODING indicator
This indicator lights up when the unit is decoding signals recorded in a multi channel format.

6 Use the CINEMA STUDIO EX buttons to enjoy the CINEMA STUDIO EX sound effects.

A/B/C buttons
Press to activate the CINEMA STUDIO EX A, B or C sound field (page 29).

7 Use the SOUND FIELD buttons to enjoy surround sound. For details, see "Enjoying Surround Sound" starting from page 27.

A.F.D. button / indicator
Press to set the receiver to automatically detect the type of audio signal being input and perform proper decoding (if necessary).

MODE button / indicator
Press to activate the sound field selection mode (page 28).

2CH button / indicator
Press to output sound from only the front (left and right) speakers.

8 INPUT MODE button
Press to select the input mode for your digital components (DVD/LD, TV/SAT and MD/TAPE). Each press switches the input mode of the currently selected component.

Select	To
AUTO	Give priority to digital signals when there are both digital and analog connections. If there are no digital signals, analog is selected
DIGITAL (OPTICAL)	Specify the digital audio signals input to the DIGITAL OPTICAL input jacks
DIGITAL (COAXIAL)	Specify the digital audio signals input to the DIGITAL COAXIAL input jacks (DVD/LD only)
ANALOG	Specify the analog audio signals input to the AUDIO IN (L and R) jacks

Note
If 96 kHz digital signal is input, the tone, sound field and surround parameters do not function.

9 Function buttons
Press one of the buttons to select the component you want to use.

To select	Press
VCR	VIDEO 1 or VIDEO 2
DVD or LD player	DVD/LD
TV or satellite tuner	TV/SAT
MD or Tape deck	MD/TAPE
CD player	CD
Built in tuner	TUNER
An audio component	AUX

After selecting the component, turn on the component you selected and play the program source.

- After selecting VCR, DVD player, or LD player, turn on the TV and set the TV's video input to match the component you selected.

10 MASTER VOLUME control
After turning on the component you selected, rotate to adjust the volume.

11 MUTING button
Press to mute the sound. MUTING appears in the display when the sound is muted.

12 EQUALIZER button
Press to turn the equalizer on or off. The EQ indicator in the display lights when the equalizer is turned on. When you adjust the equalizer using the EQ parameters (page 36) the settings are stored automatically and can be reproduced wherever you turn on the equalizer.

- The equalizer is not compatible with 96 kHz digital audio signals and during MULTI CH IN input.

When you want to listen to an analog source without any digital processing
Do the following to bypass the sound field and equalizer circuits.
1 Press 2CH.
2 Press EQ to turn off the EQ indicator.
The result will be a sound that is highly faithful to the program source.

13 MULTI CH IN button
Press to enjoy the audio source connected to the MULTI CH IN jacks with the video from the selected component. Press again to cancel MULTI CH IN.

- When the MULTI CH IN is selected, the tone, equalizer, and sound field effects do not function.

14 SPEAKERS button
Press SPEAKERS button to ON.

PHONES jack
Connects headphones.
- When you connect the headphones, no sound will come from the speakers.

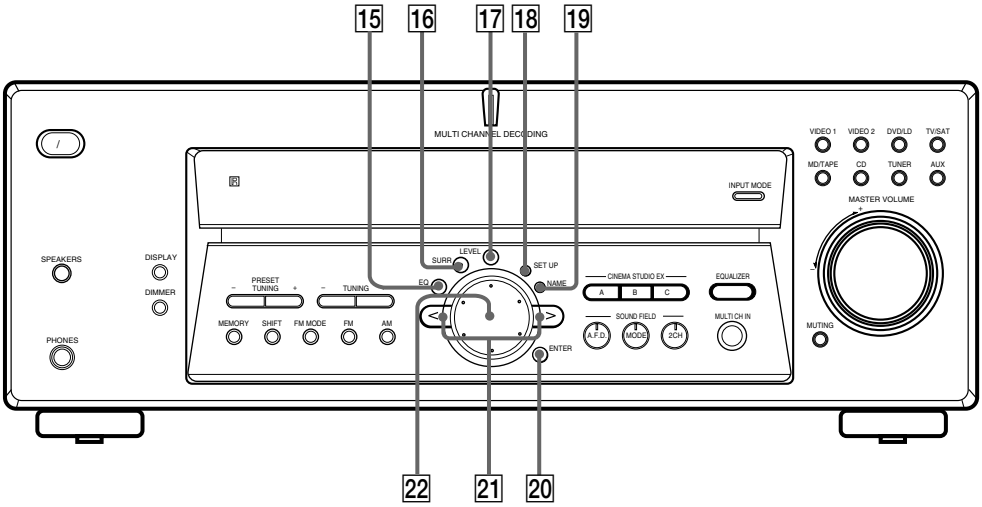

15 EQ button
Press to activate the equalizer parameters (page 36). The indicator on the button lights up and you can adjust the various equalizer parameters.

16 SURR button
Press to activate the surround parameters (page 34). The indicator on the button lights up and you can adjust the various surround parameters (effect level, wall type, etc.).

17 LEVEL button
Press to activate the speaker level parameters (page 35). The indicator on the button lights up and you can adjust the various speaker level parameters (front balance, surround balance, etc.).

18 SET UP button
Press to activate the setup mode, then use the cursor buttons (21) to select any of the following indications. You can then make various settings using the jog dial (22).

When you select	You can
Speaker type	Specify the type of speakers. (page 17)
Speaker setup	Specify the front, center, surround speaker sizes, the surround speaker position, and whether or not you are using a sub woofer. (page 17)
Speaker Distance	Specify the front, center, and surround speaker distances. (page 19)
MULTI CH IN video input	Specify the video input to be used with the audio signals from the MULTI CH IN jacks. (page 45)
Dimmer range	Specify the display to turn off when you press the DIMMER button several times. (page 45)

19 NAME button
Press to activate the name function and enter names for preset stations and program sources (page 43).

20 ENTER button
Press to enter individual characters for the preset station and program source names.

21 Cursor buttons (</>)
Press to select various speaker level, surround, and equalizer parameters (etc.).

22 Jog dial
Turn to adjust the selected speaker level, surround, and equalizer parameters (etc.).

SECTION 2
TEST MODE

FACTORY PRESET MODE

* All preset contents are reset to the default setting.
* Procedure:
  While depressing the VIDEO 1 and the 2CH buttons simultaneously, press the power I/⏻ button to turn on the main power. The message FACTORY appears and switch off the set.
  While depressing the VIDEO 1 and the 2CH buttons simultaneously, press the power I/⏻ button again. The message FACTORY appears and the present contents are reset to the default values.

AM CHANNEL STEP 9 KHZ/10 KHZ SELECTION MODE

* Either the 9 kHz step or 10 kHz step can be selected for the AM channel step.
* Procedure:
  Set the FUNCTION to AM. Turn off the main power.
  While depressing the TUNING+ button or the PRESET TUNING+ button, press the power I/⏻ button to turn on the main power. Either the message 9 k STEP or 10 k STEP appears. Select the desired step.
* For US/Canadian/E model only

DSP VERSION DISPLAY MODE

* DSP version is displayed.
* Procedure :
  While depressing the MD/TAPE and the A.F.D buttons simultaneously, press the power I/⏻ button to turn on the main power. " DSP "and the version are displayed.

FLUORESCENT INDICATOR TUBE TEST MODE

* All fluorescent segments are tested. When this test is activated, all segments turn on at the same time, then each segment turns on one after another.
* Procedure:
  While depressing the MD/TAPE and the SHIFT buttons simultaneously, press the power I/⏻ button to turn on the main power.

1. All segments turn on.

All LED turn on.

2. Press the VIDEO 1 button, confirm display

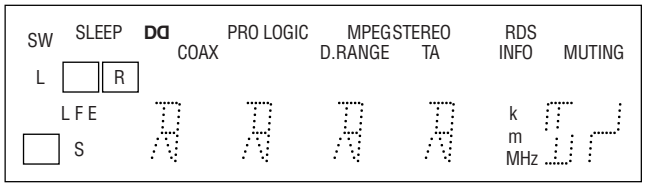

MULTI CHANNEL DECODING (blue), Digital Cinema Sound, LEVEL , SET UP , A.F.D and MODE LED turn on.

3. Press the VIDEO 1 button, confirm display

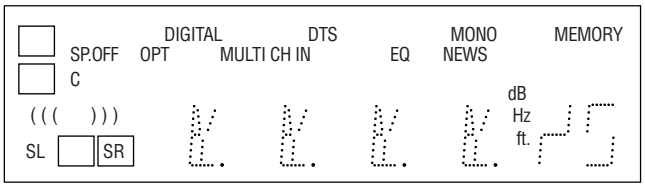

EQ , SUR , NAME and 2CH LED turn on.

4. Press the VIDEO 1 button, All segments turn off.

5. Every pressing of the VIDEO 1 button turns on each segment and LED one after another in the same order.
   (Not only the VIDEO 1 button, but also the other buttons such as VIDEO 2 , DVD/LD , TV/SAT , MD/TAPE , CD , TUNER and AUX can be used.)

SOUND FIELD CLEAR MODE

* The preset sound field is cleared when this mode is activated. Use this mode before returning the product to clients upon completion of repair.
* Procedure:
  While depressing the SOUND FIELD MODE button, press the power I/⏻ button to turn on the main power. The message SURR. CLR. appears and initialization is performed.

DEMONSTRATION MODE

* Demonstration is performed.
* Procedure :
  While depressing the SET UP button, press the power I/⏻ button. The message appears and demonstration is performed.
* To finish DEMONSTRATION MODE, press the power I/⏻ button while the introduction message appears in the display.

SOFTWARE VERSION DISPLAY MODE

* The software version is displayed.
* Procedure:
  While depressing the TUNER and the SHIFT buttons simultaneously, press the power I/⏻ button to turn on the main power. The model name, destination and the software version are displayed.

KEY CHECK MODE

* Button check
* Procedure:
  While depressing the VIDEO 1 and the SHIFT buttons simultaneously, press the power I/⏻ button to turn on the main power.
  "REST 37" appears.
  Every pressing of any button other than I/⏻ and SPEAKERS counts down the buttons. The buttons which are already counted once are not counted again. When all buttons are pressed "REST 00" appears.
  When MASTER VOLUME is rotated in clockwise direction, "VOL MIN", "VOL 1" to "VOL 48", "VOL MAX" appear.

DSP TEST MODE

* DSP tests are performed.
* Procedure :

1. While depressing the LEVEL and CD buttons simultaneously, press the power I/⏻ Button to turn on the main power.
2. Press the NAME button.
3. Select the item by pressing Cursor button (< or >).
4. Select the function by turning Jog dial if selection is necessary.

Items	Function	Description	Remark
SWAP	NORM	Normal channel output	Selection of setting output channels
	ALL	Left input → Front Left, Surround Left, Center channel output Right input → Front Right, Surround Right, Sub Woofer channel output	
	C SW	Left input → Center channel output Right input → Sub Woofer channel output	
	SLSR	Left input → Surround Left channel output Right input → Surround Right channel output	
DSP communication	–	When this item is selected the message will be displayed " OK " if the checking is correct. " ERROR " will be displayed in a case of an error.	Checking communication between DSP and microcom
Bass Management	–	Not used for service	
Main Speaker cut off Freq.	–	Not used for service	
LFE cut off Freq.	–	Not used for service	
Co-ef. Read Address	–	Not used for service	
Co-ef. Read Data	–	Not used for service	
Co-ef. Write Address	–	Not used for service	
Co-ef. Write Data	–	Not used for service	
SRAM	OFF	" RAMC. OFF " will be displayed in a case of no checking.	Checking communication between DSP and SRAM
	ON	By turning Jog dial " RAMC. EXE " will be displayed during the checking. After a while " RAMC. PASS " will be displayed if the checking is good. " RAMC. NG " will be displayed if an error occurs.	

SECTION 3
DIAGRAMS

3-1. CIRCUIT BOARDS LOCATION

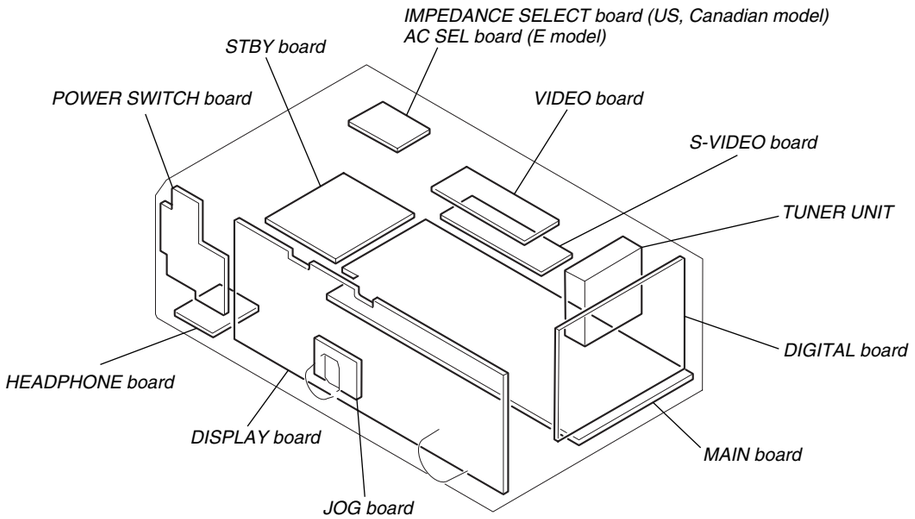

THIS NOTE IS COMMON FOR PRINTED WIRING BOARDS AND SCHEMATIC DIAGRAMS.
(In addition to this necessary note is printed in each block.)

For schematic diagrams.
Note:
- All capacitors are in µF unless otherwise noted. pF: µµF 50 WV or less are not indicated except for electrolytics and tantalums.
- All resistors are in Ω and ¼ W or less unless otherwise specified.
- % : indicates tolerance.
- △ : internal component.
- : nonflammable resistor.
- : fusible resistor.
- : panel designation.

Note: The components identified by mark ⚠ or dotted line with mark ⚠ are critical for safety. Replace only with part number specified.	**Note:** Les composants identifiés par une marque ⚠ sont critiques pour la sécurité. Ne les remplacer que par une pièce portant le numéro spécifié.
以阴影和 ⚠ 标志来识别的零部件，在安全方面具有关键性，因此只能以规定号码的零部件来更换。	

- : B+ Line.
- : B– Line.
- : adjustment for repair.
- Voltages and waveforms are dc with respect to ground under no-signal (detuned) conditions.
  No mark : FM
- Voltages are taken with a VOM (Input impedance 10 MΩ). Voltage variations may be noted due to normal production tolerances.
- Waveforms are taken with a oscilloscope.
- Circled numbers refer to waveforms.
- Signal path.
  : FM
  : CD (ANALOG)
  : DVD (DIGITAL)
- Abbreviation
  CND : Canadian model
  MY : Malaysia model
  SP : Singapore model
  TW : Taiwan model
  KR : Korea model
  MX : Mexican model
  AR : Argentina model
  CH : Chinese model
  AUS : Australian model

For printed wiring boards.
Note:
- : parts extracted from the component side.
- ○ : Through hole.
- △ : internal component.
- : Pattern from the side which enables seeing.

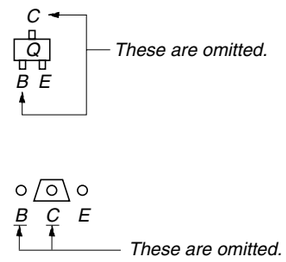

• Waveform
DIGITAL Board

① IC1101 ㉑ (XOUT)

② IC1201 ⑨ (MCLK)

③ IC1301 ⑭ (XO)

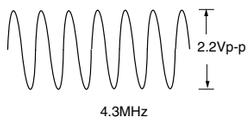

④ IC1601 ⑧③ (XI)

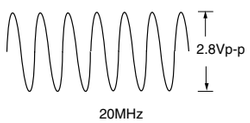

9

3-2. BLOCK DIAGRAMS – MAIN SECTION –

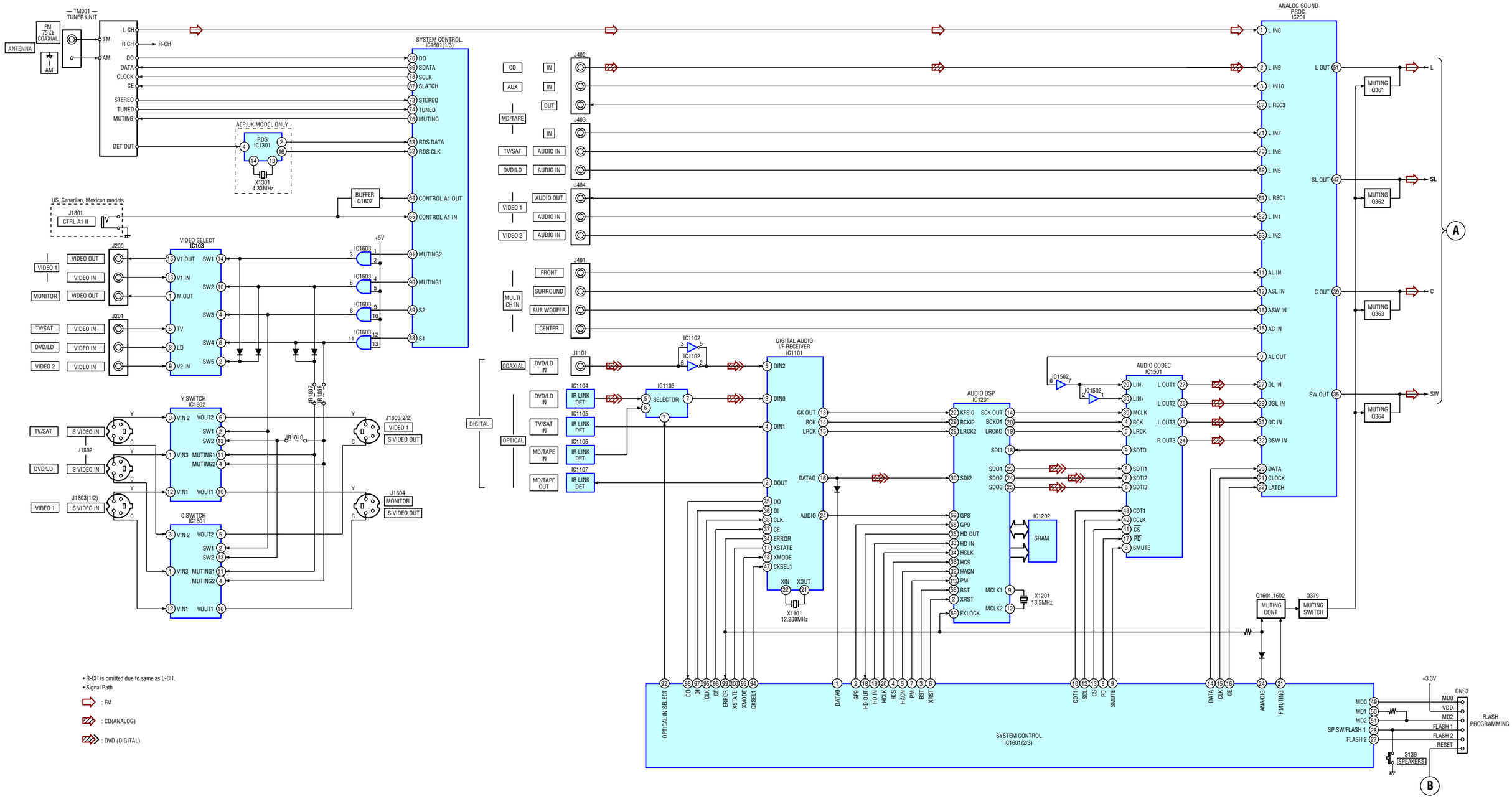

– DISPLAY/POWER SECTION –

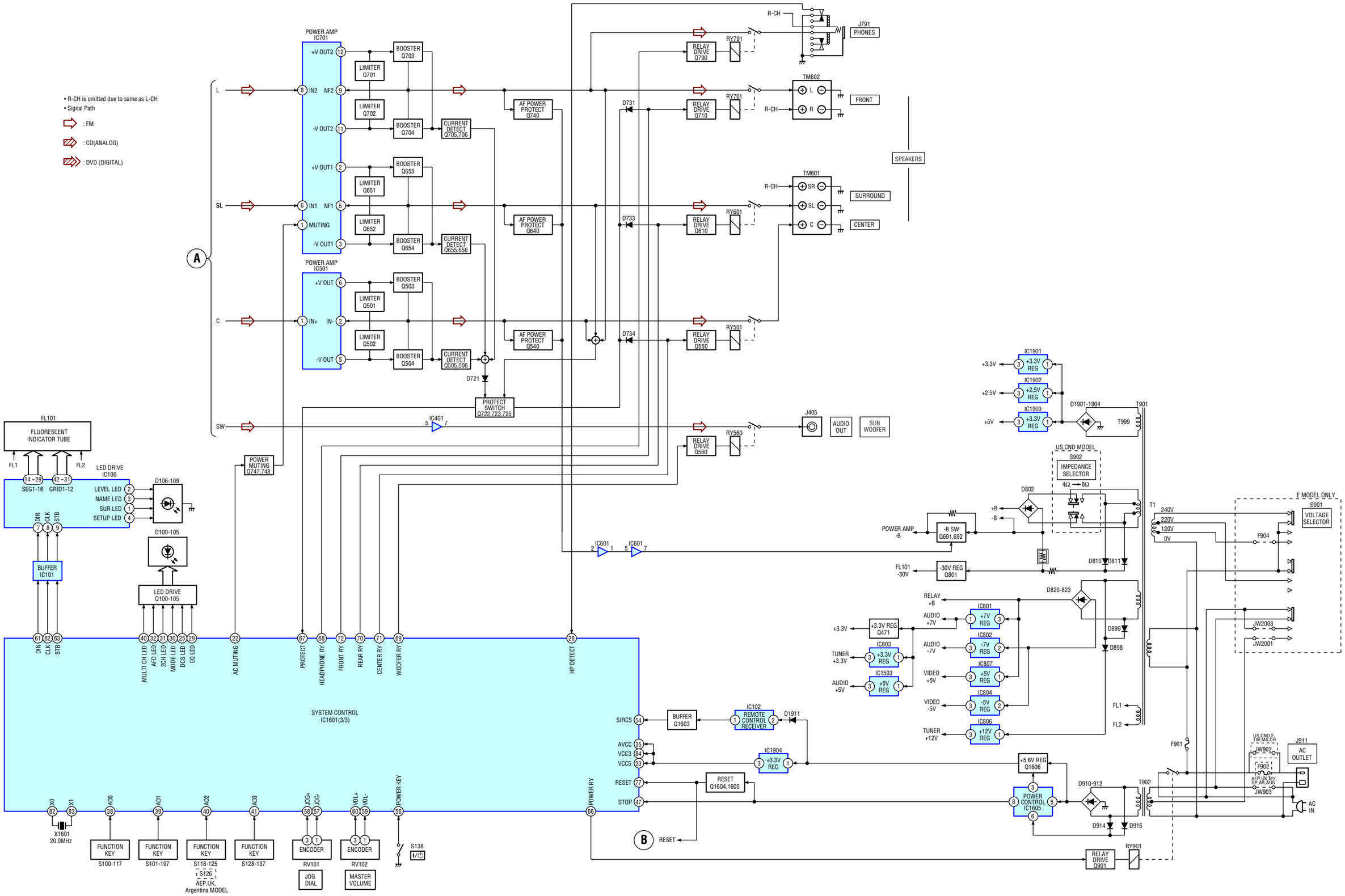

3-3. PRINTED WIRING BOARD – DIGITAL SECTION –

• See page 9 for Circuit Boards Location.

There are a few cases that the part printed on this diagram isn't mounted in this model.

• **Semiconductor Location**

Ref. No.	Location
D1001	B-10
D1101	B-2
D1501	C-9
D1502	C-9
D1601	F-1
D1602	G-2
D1603	E-3
D1901	G-7
D1902	G-7
D1903	F-7
D1904	F-7
D1911	G-3
D1912	F-8
D1913	E-3
D1914	E-8
IC1101	C-3
IC1102	B-1
IC1103	B-4
IC1104	B-7
IC1105	B-8
IC1106	B-8
IC1107	B-9
IC1201	D-2
IC1202	C-3
IC1301	D-4
IC1501	C-2
IC1502	C-1
IC1503	D-10
IC1552	C-1
IC1601	F-2
IC1603	B-4
IC1605	G-4
IC1901	F-8
IC1902	F-8
IC1903	G-8
IC1904	F-8
Q1601	F-1
Q1602	F-1
Q1603	G-2
Q1604	G-2
Q1605	G-2
Q1606	G-7
Q1607	E-4

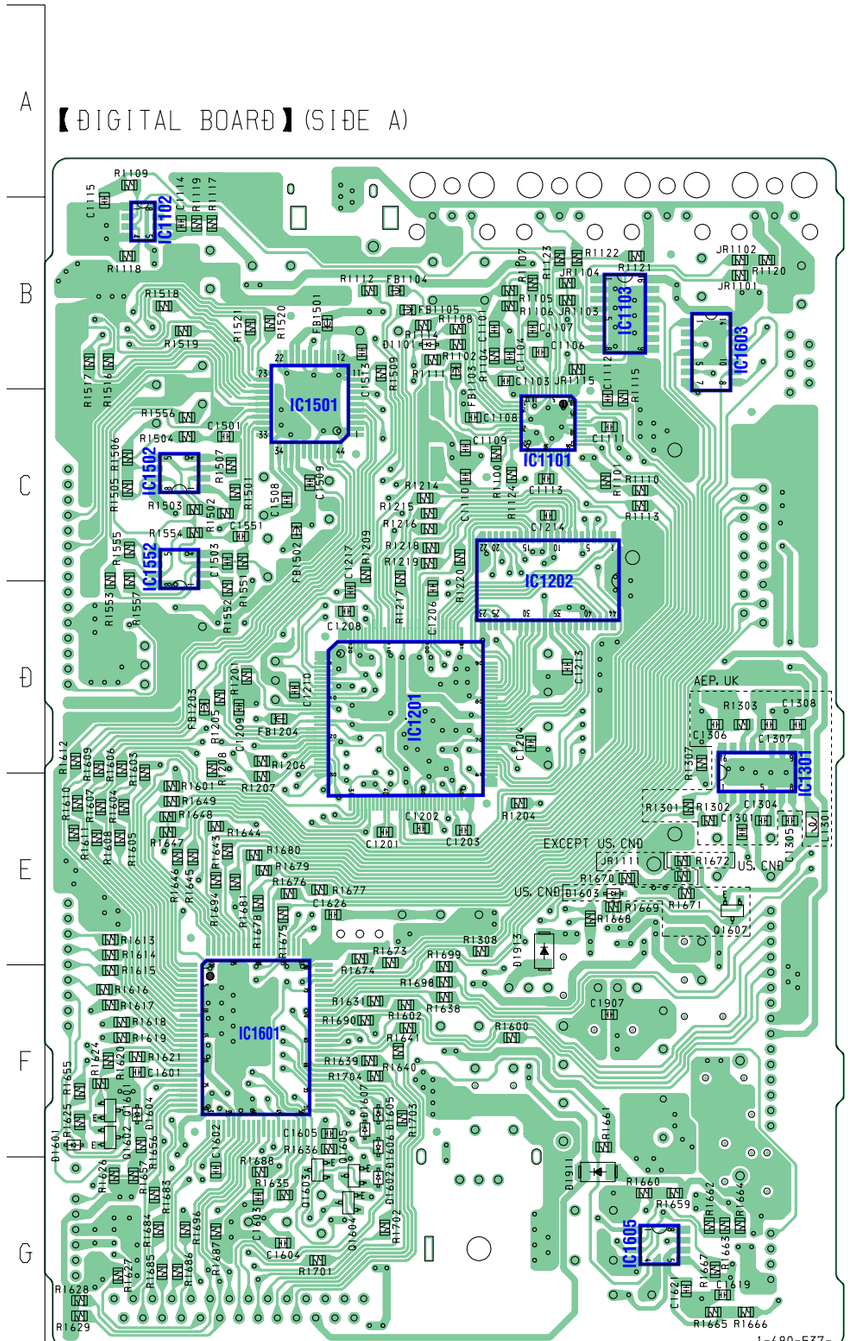

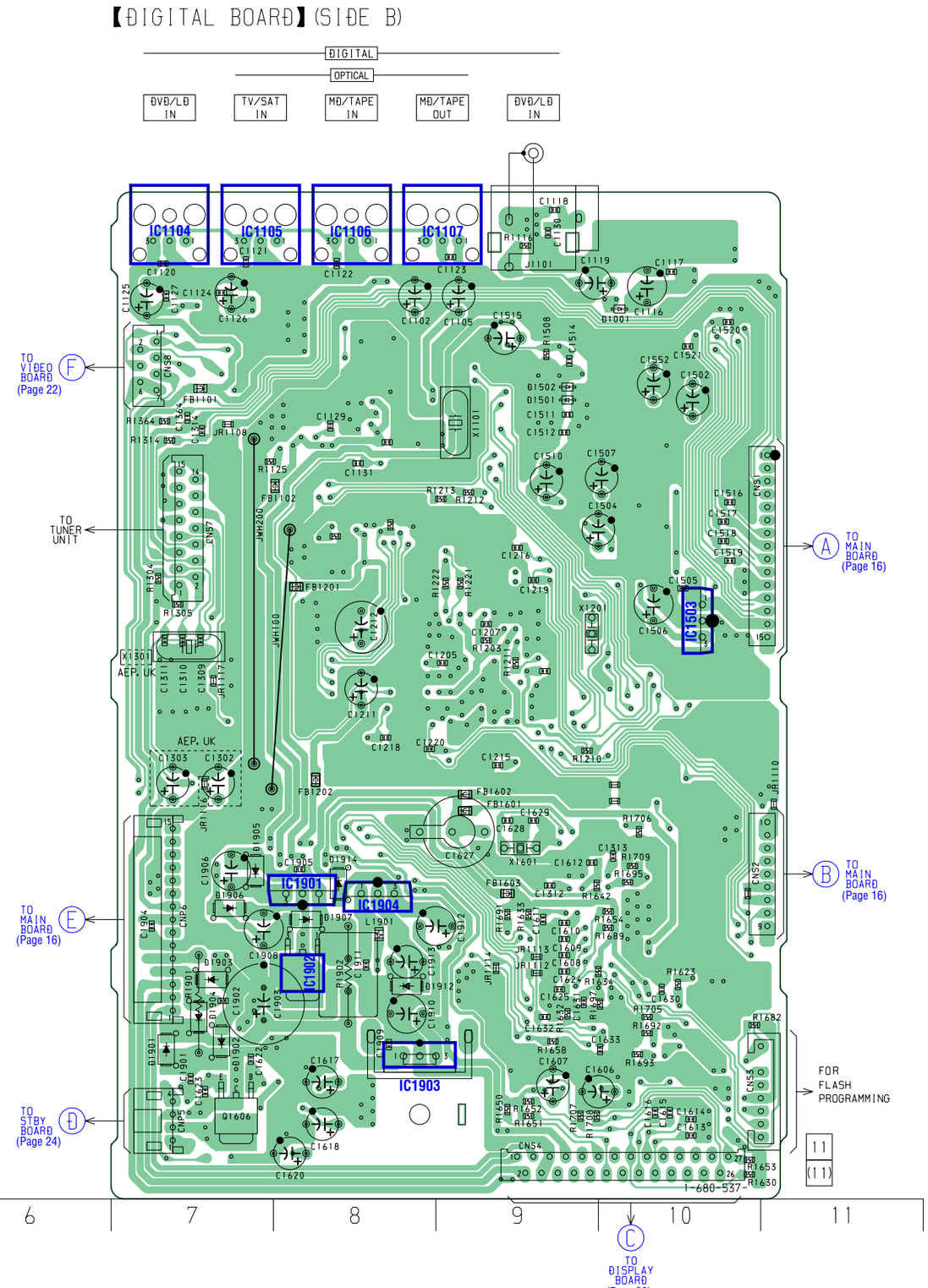

3-4. SCHEMATIC DIAGRAM – DIGITAL SECTION (1/3) –

• See page 9 for Waveform. • See page 25 for IC Block Diagrams.

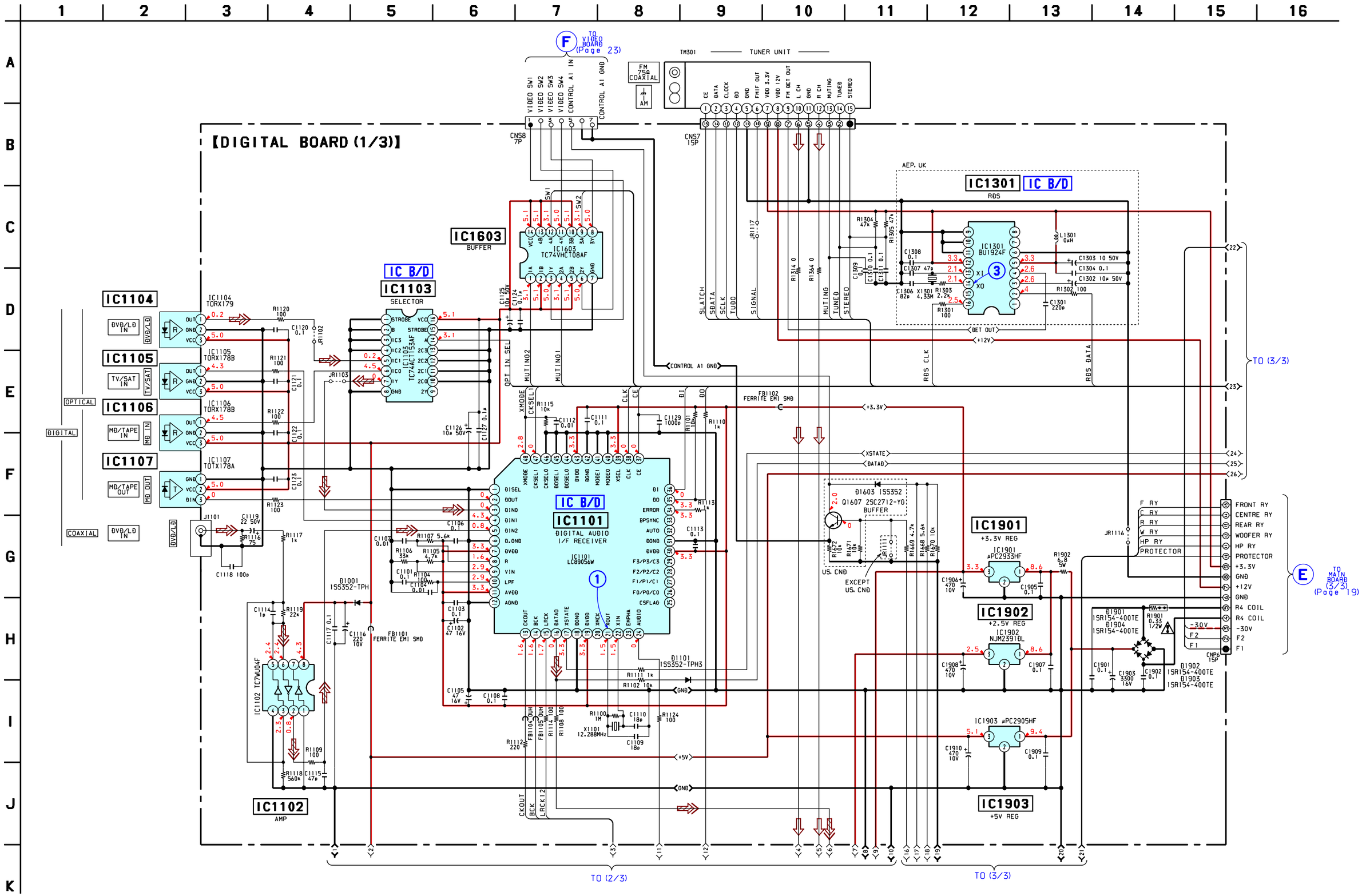

3-5. SCHEMATIC DIAGRAM – DIGITAL SECTION (2/3) –

• See page 9 for Waveform.

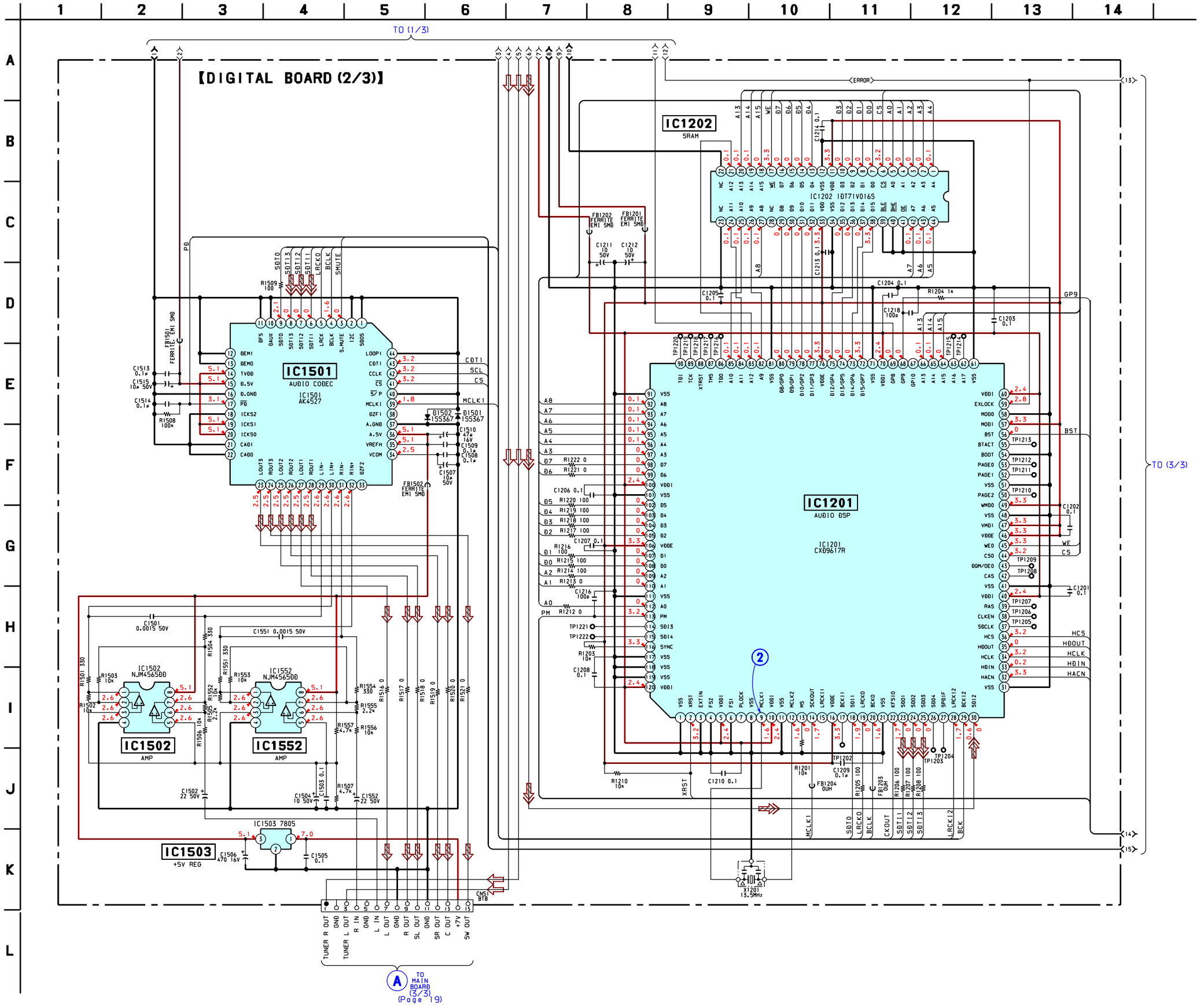

3-6. SCHEMATIC DIAGRAM – DIGITAL SECTION (3/3) –

• See page 9 for Waveform.
• See page 26 for IC Block Diagrams.
• See page 27 for IC Pin Function.

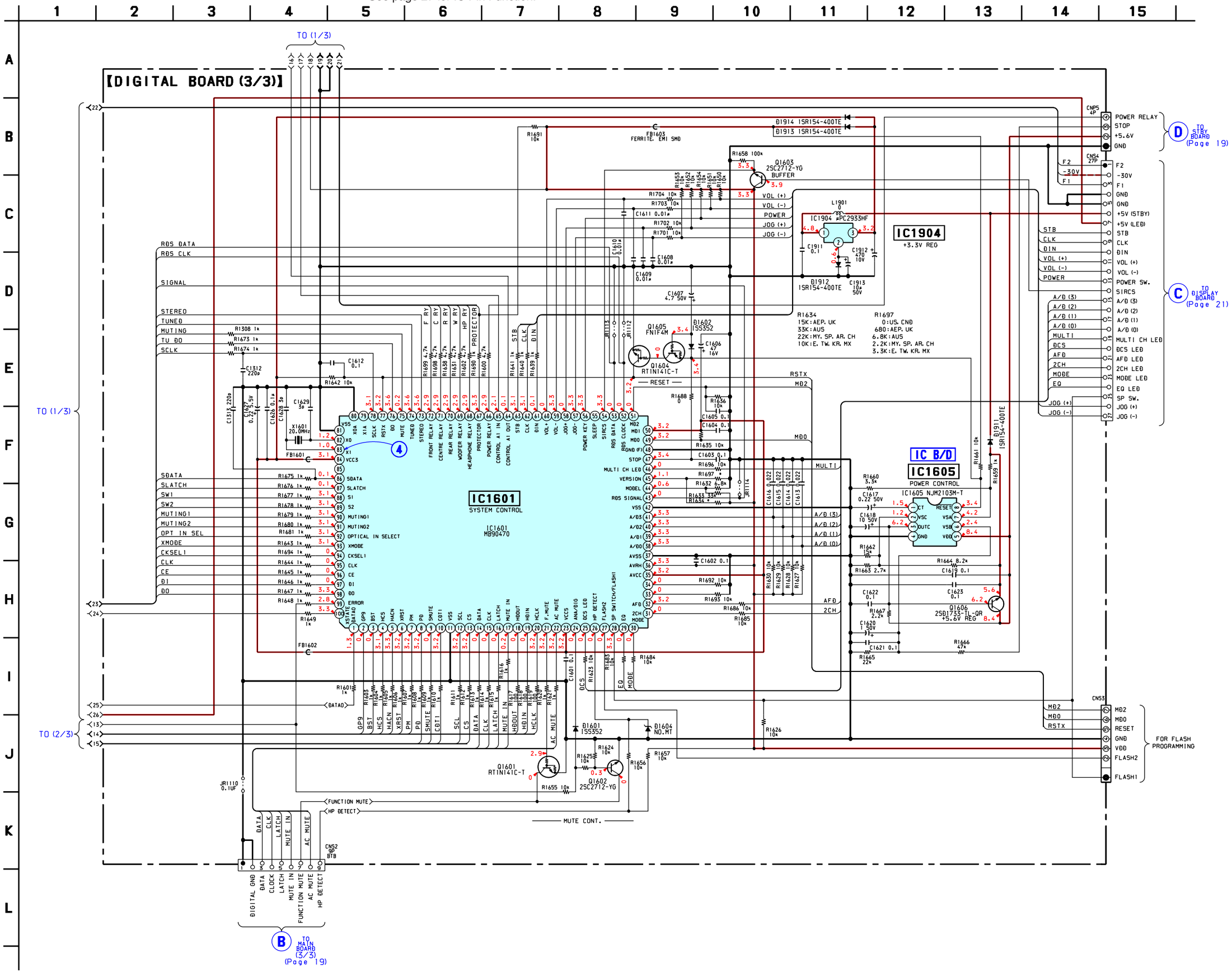

3-7. PRINTED WIRING BOARD – MAIN SECTION –

• See page 9 for Circuit Boards Location.

There are a few cases that the part printed on this diagram isn't mounted in this model.

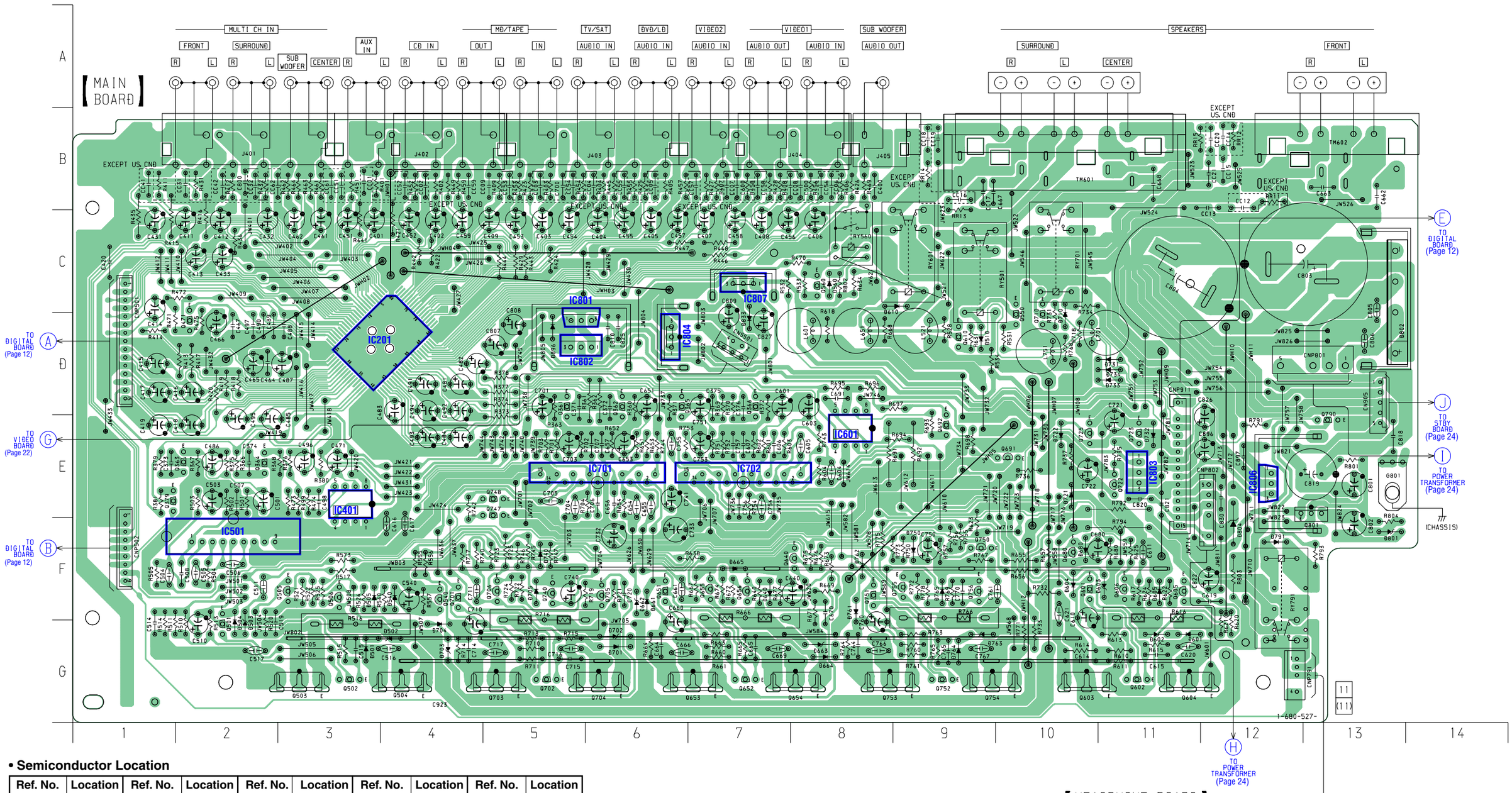

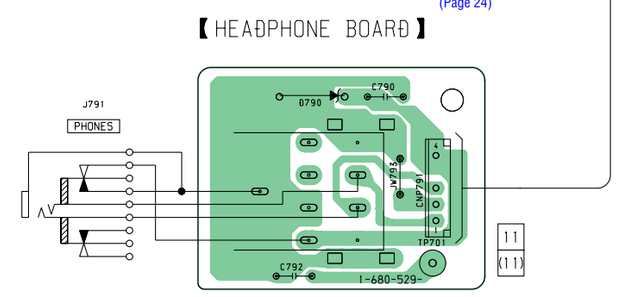

• **Semiconductor Location**

Ref. No.	Location	Ref. No.	Location	Ref. No.	Location	Ref. No.	Location	Ref. No.	Location
D505	F-2	D791	F-12	Q361	D-5	Q604	G-11	Q710	D-10
D510	D-9	D801	F-13	Q362	D-6	Q605	F-11	Q722	E-11
D540	F-4	D802	D-13	Q363	E-2	Q606	F-11	Q723	E-11
D560	C-8	D804	F-12	Q364	E-2	Q610	D-9	Q725	E-10
D605	F-11	D833	D-7	Q365	D-6	Q640	F-8	Q740	F-5
D610	C-8	D896	D-5	Q366	D-7	Q651	F-6	Q747	E-5
D640	F-7			Q379	E-1	Q652	G-7	Q748	E-5
D665	F-7	IC201	D-4	Q471	D-2	Q653	G-7	Q750	F-9
D680	F-10	IC401	E-3	Q501	G-2	Q654	G-8	Q751	F-8
D705	F-5	IC501	F-2	Q502	G-3	Q655	F-7	Q752	G-9
D710	D-10	IC601	E-8	Q503	G-3	Q656	F-7	Q753	G-9
D721	E-10	IC701	E-6	Q504	G-4	Q680	F-10	Q754	G-9
D722	E-10	IC702	E-7	Q505	F-3	Q691	E-9	Q755	F-9
D731	D-11	IC801	C-5	Q506	F-3	Q692	E-9	Q756	F-9
D732	E-11	IC802	D-5	Q540	F-4	Q701	F-4	Q790	E-13
D733	D-11	IC803	E-11	Q550	D-10	Q702	G-5	Q801	F-13
D734	D-11	IC804	D-6	Q560	C-8	Q703	G-5		
D740	F-5	IC806	E-12	Q601	F-10	Q704	G-6		
D750	F-9	IC807	C-7	Q602	G-11	Q705	F-6		
D765	F-9			Q603	G-10	Q706	F-5		

3-8. SCHEMATIC DIAGRAM – MAIN SECTION (1/3) –

• See page 26 for IC Block Diagrams.

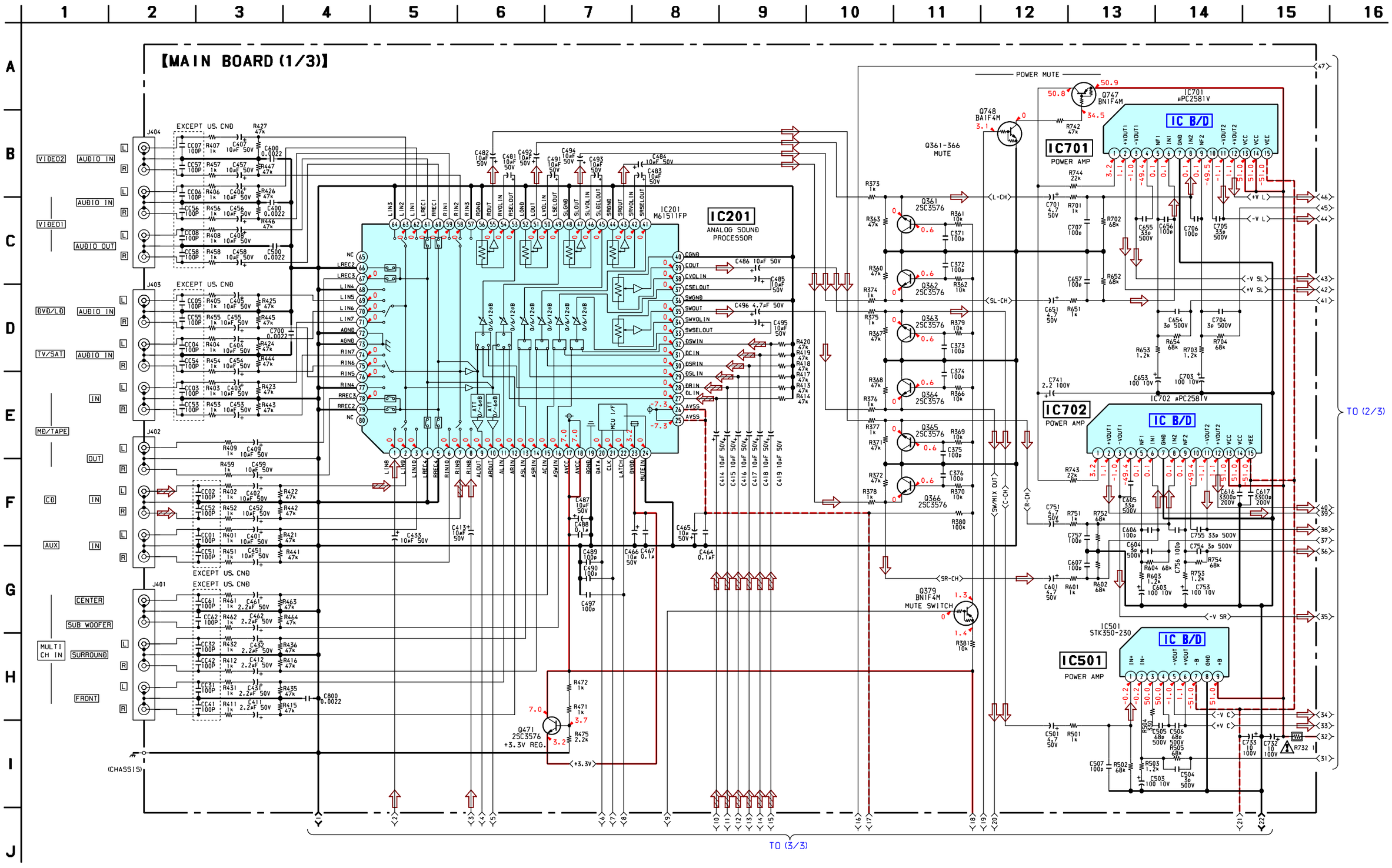

3-9. SCHEMATIC DIAGRAM – MAIN SECTION (2/3) –

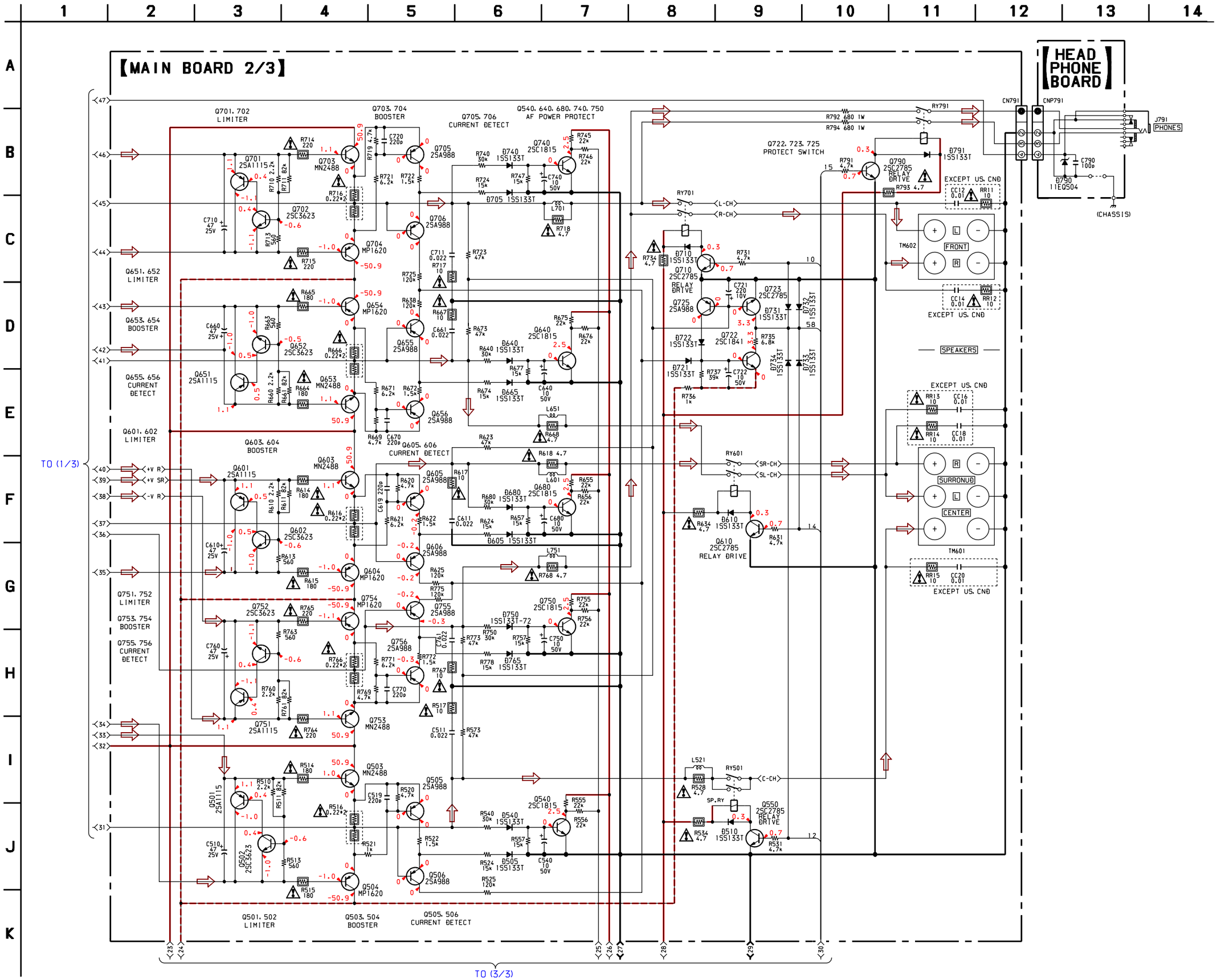

18

3-10. SCHEMATIC DIAGRAM – MAIN SECTION (3/3) –

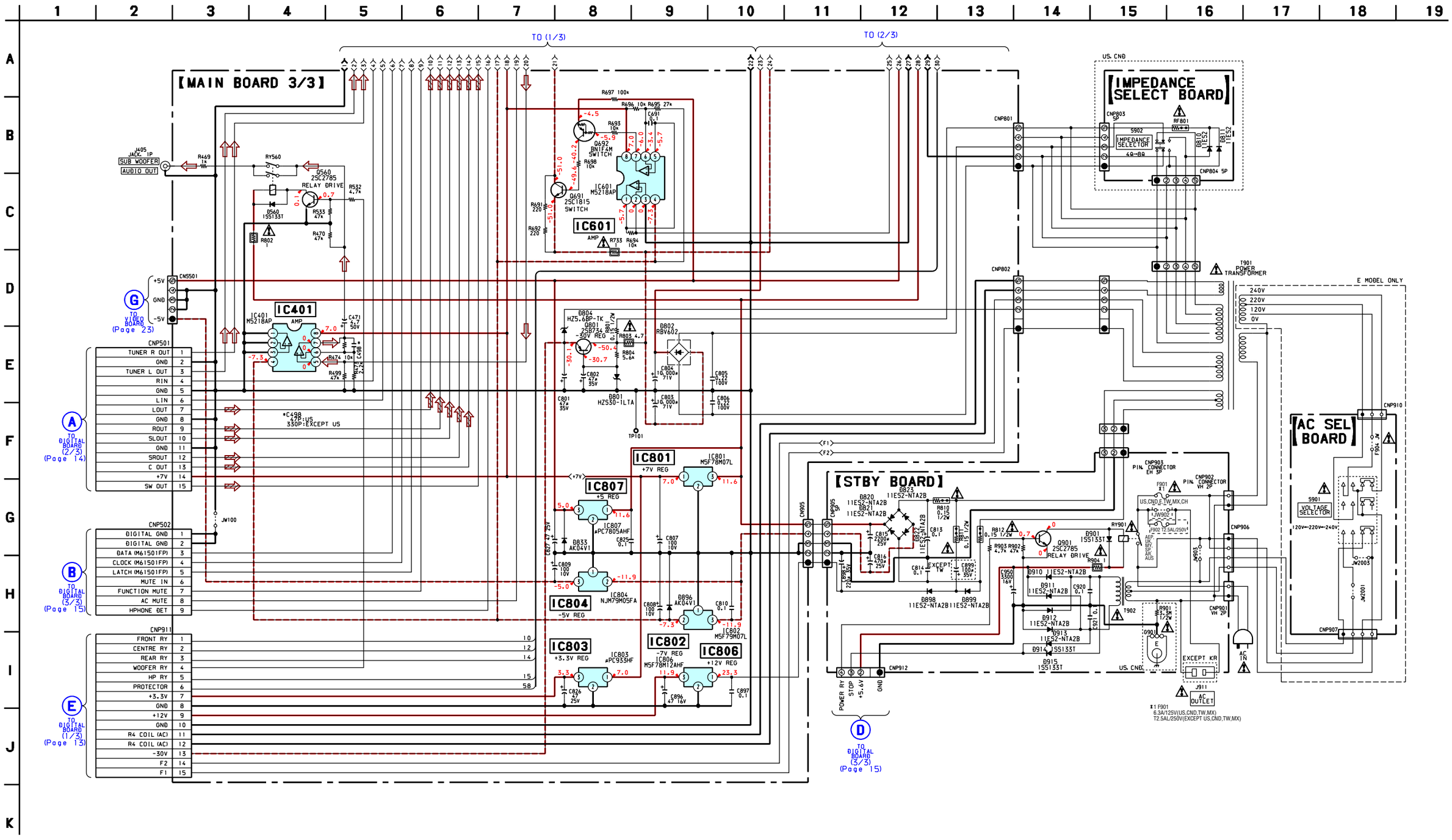

3-11. PRINTED WIRING BOARD – DISPLAY SECTION –

• See page 9 for Circuit Boards Location.

There are a few cases that the part printed on this diagram isn't mounted in this model.

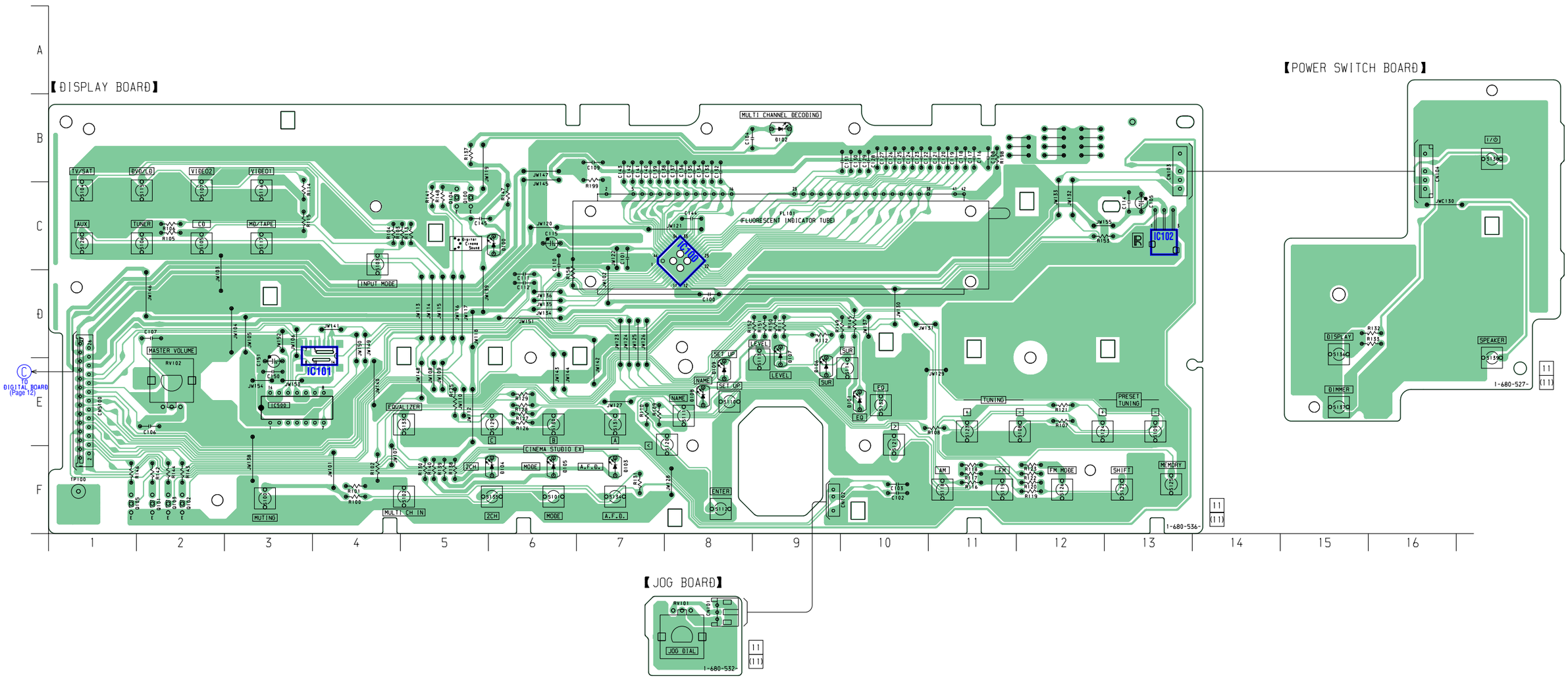

• **Semiconductor Location**

Ref. No.	Location
D100	C-6
D101	E-10
D102	B-9
D103	F-7
D104	F-6
D105	F-6
D106	E-9
D107	E-9
D108	E-8
D109	E-8
IC100	C-8
IC101	E-4
IC102	C-13
Q100	C-5
Q101	F-2
Q102	F-2
Q103	F-2
Q104	C-5
Q105	F-1

20

3-12. SCHEMATIC DIAGRAM – DISPLAY SECTION –

• See page 26 for IC Block Diagrams.

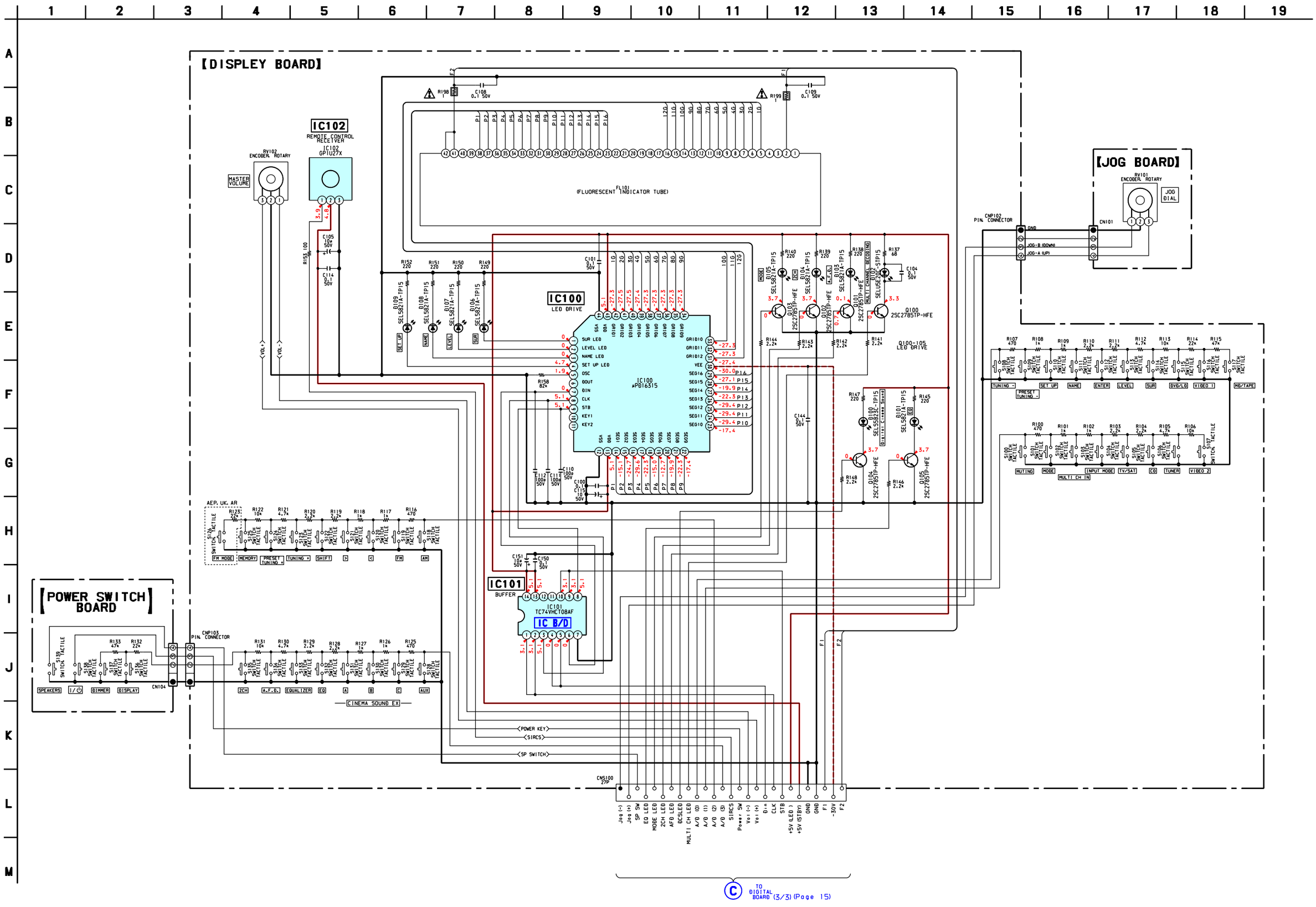

3-13. PRINTED WIRING BOARD – VIDEO SECTION –

• See page 9 for Circuit Boards Location.

There are a few cases that the part printed on this diagram isn't mounted in this model.

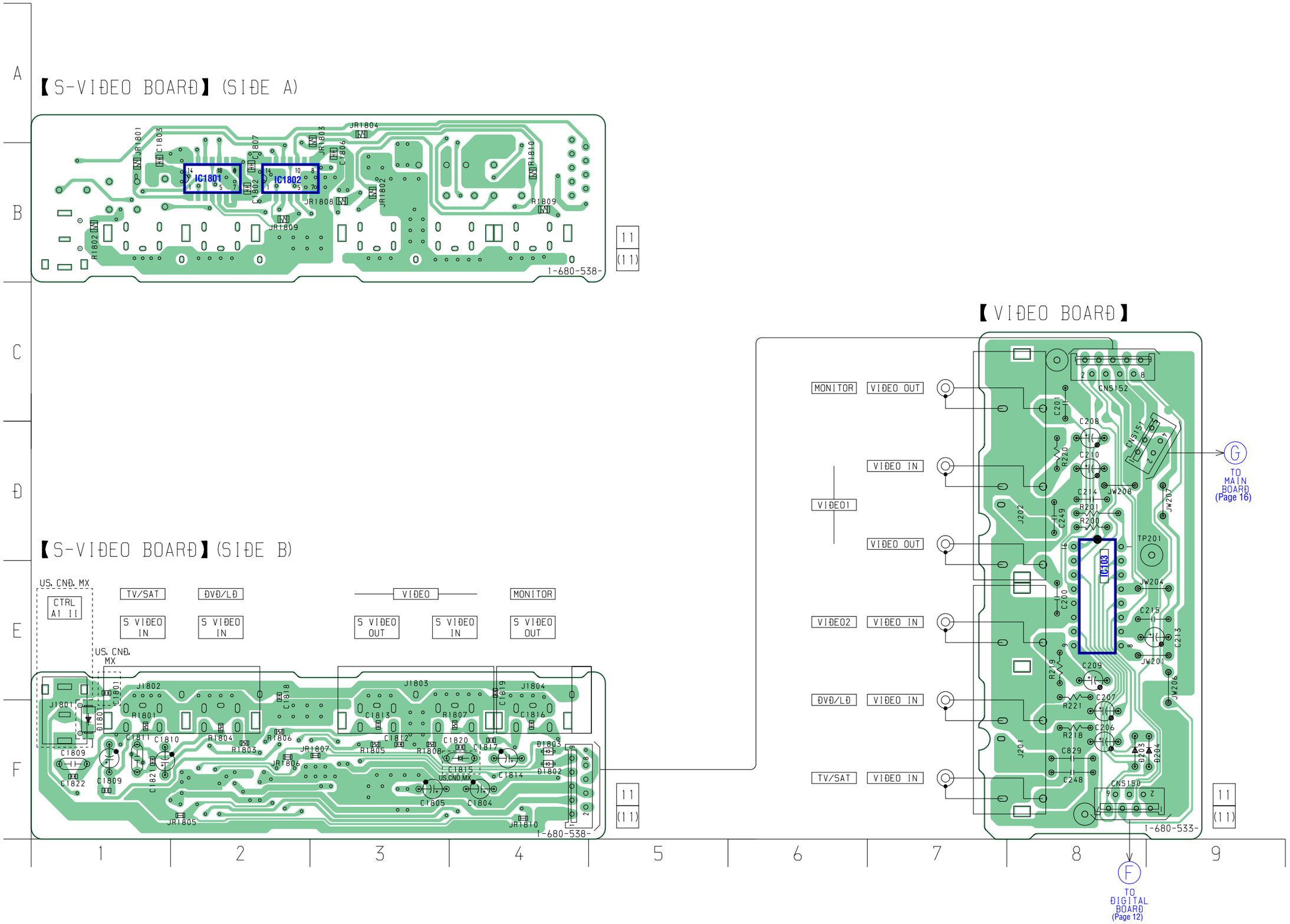

• **Semiconductor Location**

Ref. No.	Location
D203	F-8
D204	F-8
D1801	F-1
D1802	F-4
D1803	F-4
IC103	E-8
IC1801	B-2
IC1802	B-2

3-14. SCHEMATIC DIAGRAM – VIDEO SECTION –

• See page 26 for IC Block Diagrams.

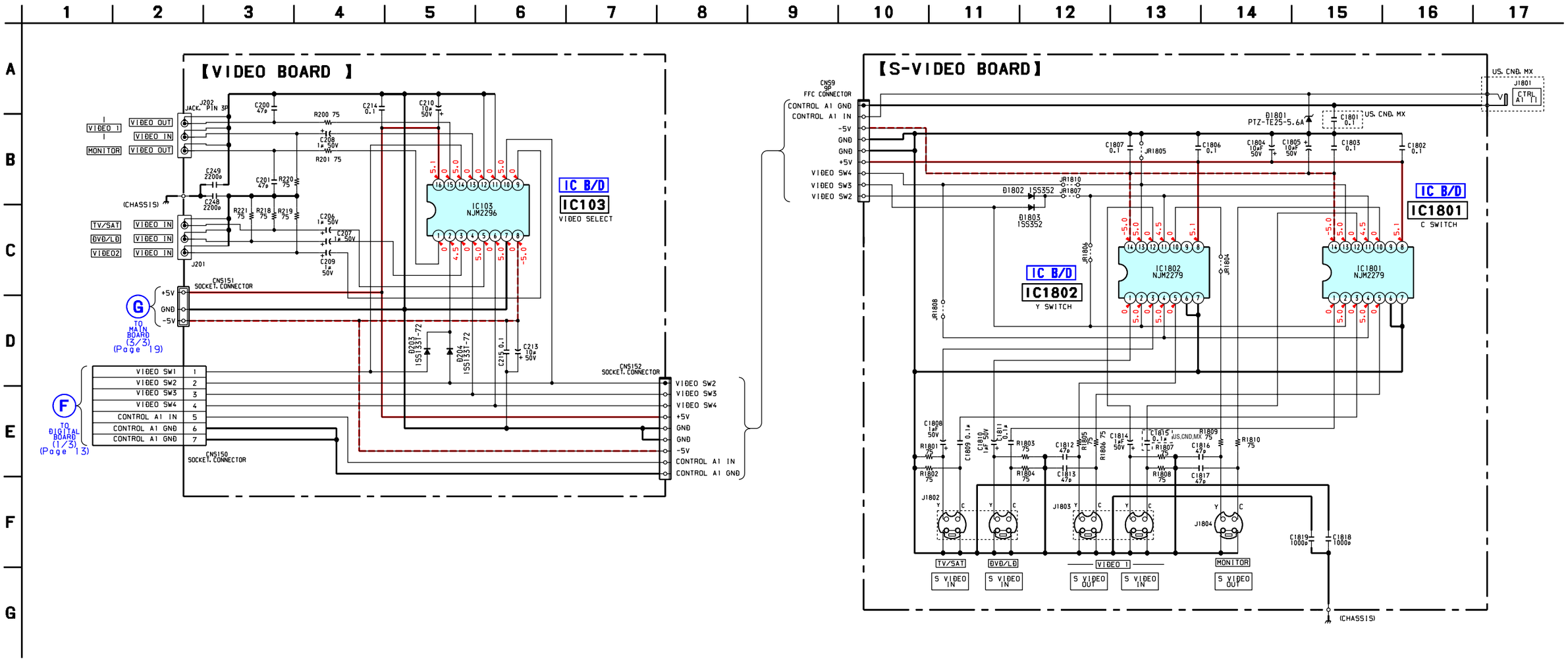

23

3-15. PRINTED WIRING BOARD – TRANS SECTION –

• See page 9 for Circuit Boards Location.

There are a few cases that the part printed on this diagram isn't mounted in this model.

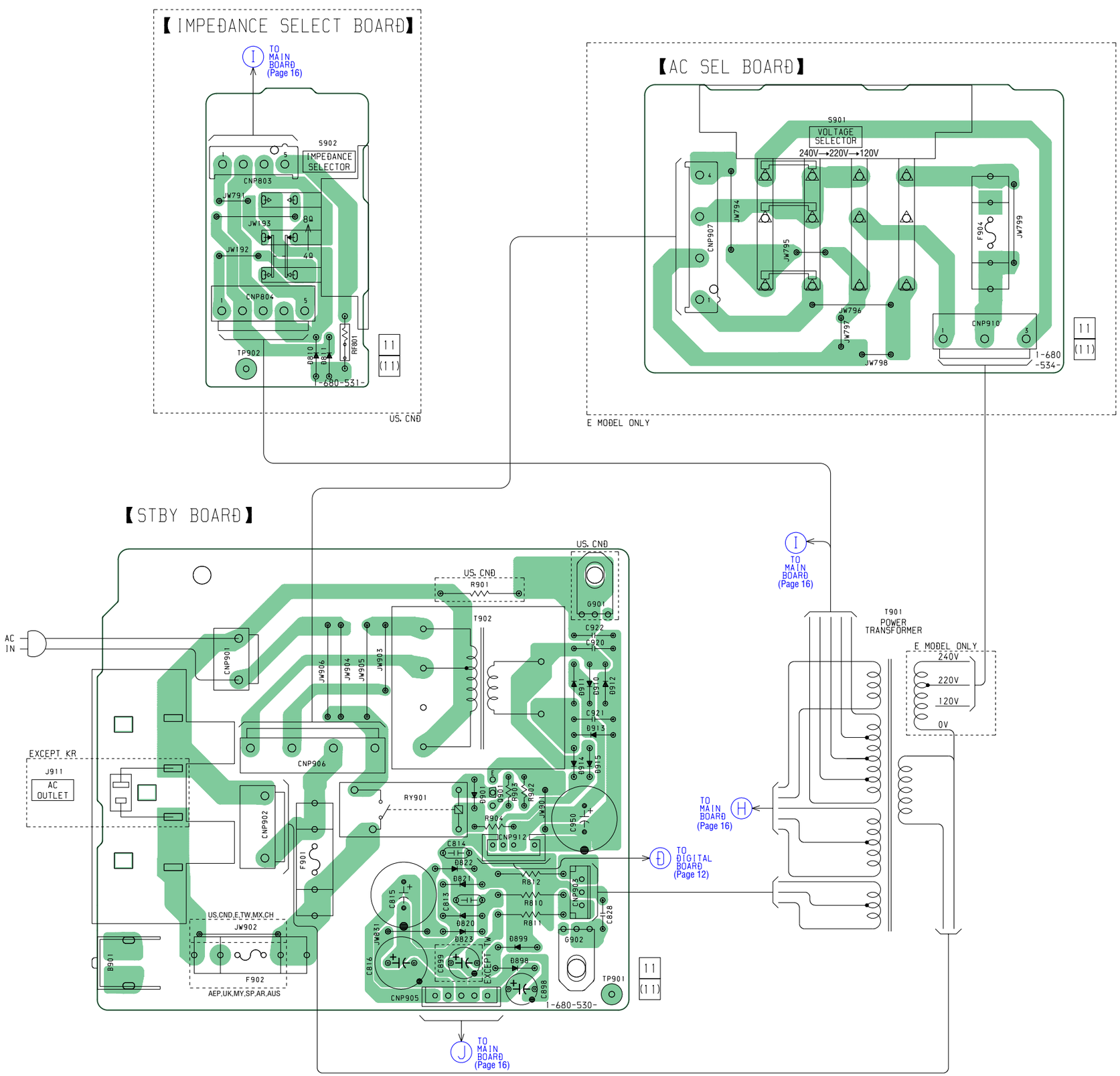

3-16. IC BLOCK DIAGRAMS

IC1101 LC89056W-E (DIGITAL BOARD)

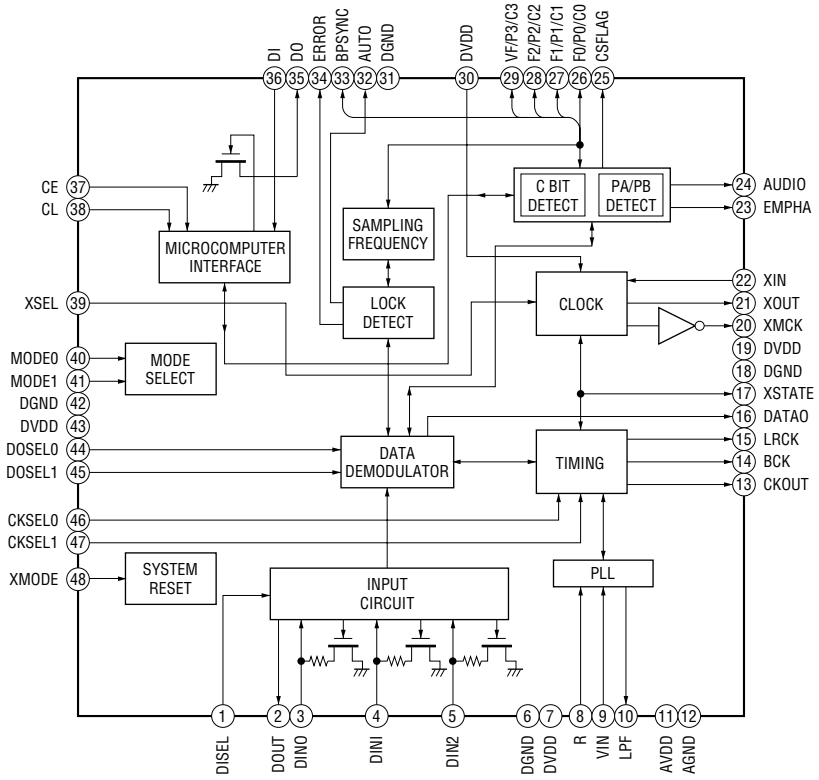

IC1103 TC74ACT153AF(EL) (DIGITAL BOARD)

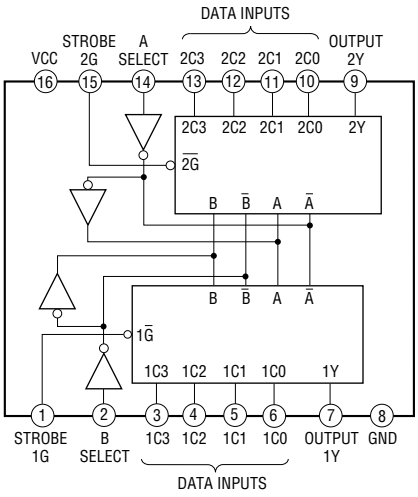

IC1301 BU1924F (DIGITAL BOARD)

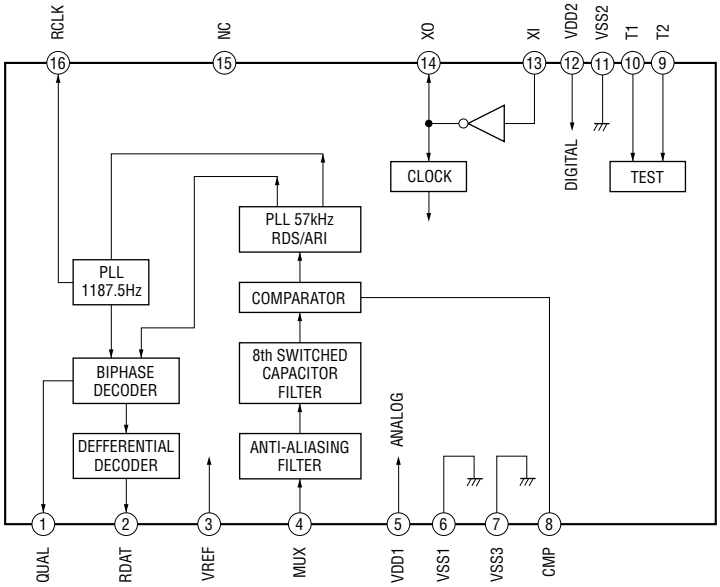

IC1605 NJM2103M-TE2 (DIGITAL BOARD)

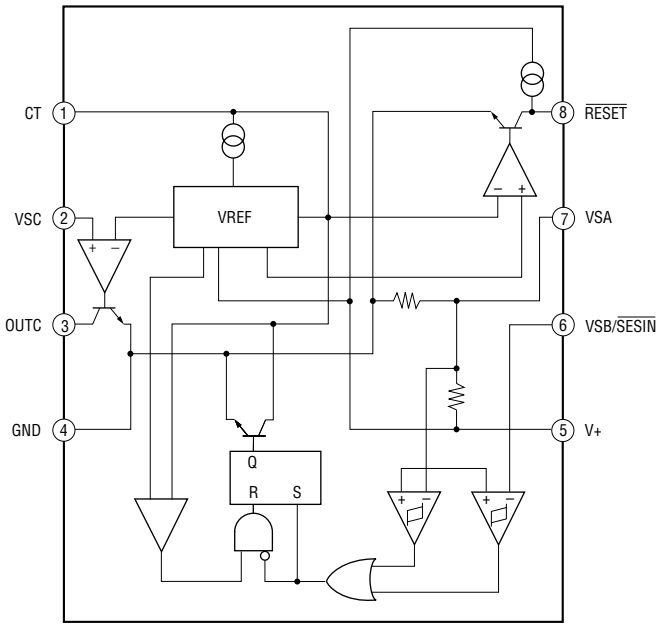

IC501 STK350-230 (MAIN BOARD)

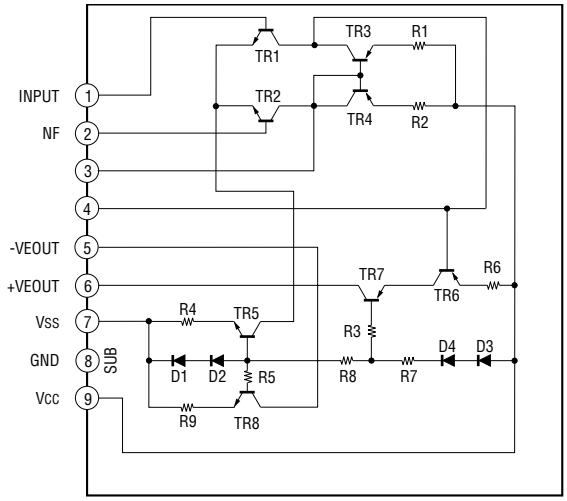

IC701 µPC2581V (MAIN BOARD)
IC702 µPC2581V (MAIN BOARD)

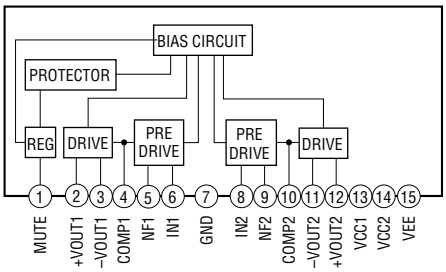

IC101 TC74VHC08AF(EL) (DISPLAY BOARD)

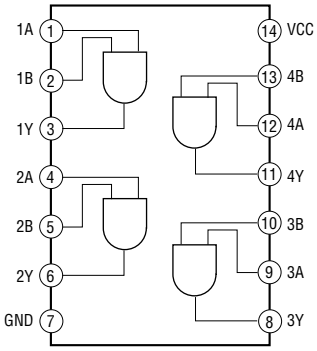

IC1801 NJM2279D (S-VIDEO BOARD)
IC1802 NJM2279D (S-VIDEO BOARD)

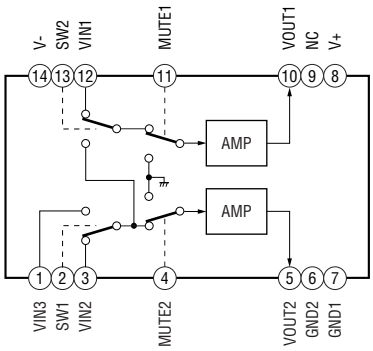

IC103 NJM2296D (VIDEO BOARD)

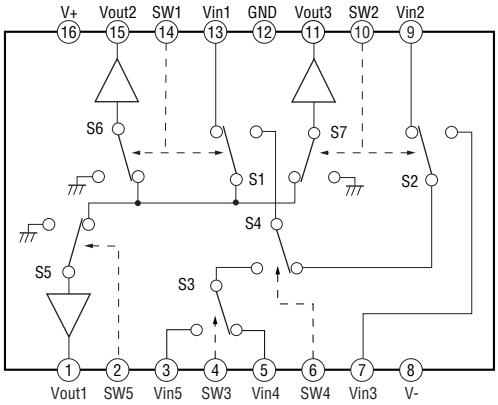

3-17. IC PIN FUNCTION DESCRIPTIONS

• IC1601 MB90478PF-G-101-BND (SYSTEM CONTROL)

Pin No.	Pin Name	I/O	Description
1	DATAO	I	Audio data signal input from DIR
2	GP9	I	GP9 signal input from DSP
3	BST	O	BST signal output to DSP
4	HCS	O	HCS signal output to DSP
5	HACN	I	HACN signal input from DSP
6	XRST	O	Reset signal output to DSP
7	PM	O	PM signal output to DSP
8	PD	O	Power down signal output to AUDIO CODEC
9	SMUTE	O	Muting signal output to AUDIO CODEC
10	CDT1	O	Control data signal output to AUDIO CODEC
11	VSS	—	Ground
12	SCL	O	Clock signal output to AUDIO CODEC
13	CS	O	Chip select signal output to AUDIO CODEC
14	DATA	O	Control data signal output to the sound processor
15	CLK	O	Clock signal output to the sound processor
16	LATCH	O	Latch signal output to the sound processor
17	MUTING IN	O	Muting signal output to the sound processor
18	HDOUT	I	HDOUT signal input from DSP
19	HDIN	O	HDIN signal output to DSP
20	HCLK	O	Clock signal output to DSP
21	F.MUTE	O	Muting signal output
22	AC MUTING	O	Muting signal output to the power amplifier
23	VCC5	—	Power supply
24	ANA/DIG	I	Muting and error signal input
25	DCS LED	O	DCS LED control signal output
26	HP DETECT	I	Headphone switch detect signal input
27	FLASH2	O	Terminal for FLASH programming
28	SP SWITCH/FLASH1	I/O	Speaker ON/OFF switch signal input / Terminal for FLASH programming
29	EQ	O	EQ LED control signal output
30	MODE	O	MODE LED control signal output
31	2CH	O	2CH LED control signal output
32	AFD	O	AFD LED control signal output
33	—	I	Not used
34	—	I	Not used
35	AVCC	—	Analog power supply
36	AVRH	—	Analog reference voltage input
37	AVSS	—	Analog ground
38	A/D0	I	Function key push signal input
39	A/D1	I	Function key push signal input
40	A/D2	I	Function key push signal input
41	A/D3	I	Function key push signal input
42	VSS	—	Ground
43	RDS SIGNAL	I	RDS signal detect input
44	MODEL	I	Version setting input (MODEL)
45	VERSION	I	Version setting input (DESTINATION)
46	MULTI CH LED	O	MULTI CH LED control signal output
47	STOP	I	AC off detect signal input
48	GND (F)	I	Terminal for FLASH programming (Ground)
49	MD0	—	Operation mode setting input
50	MD1	—	Operation mode setting input

Pin No.	Pin Name	I/O	Description
51	MD2	—	Operation mode setting input
52	RDS CLOCK	I	RDS clock signal input
53	RDS DATA	I	RDS data signal input
54	SIRCS	I	Data signal input from the remote control sensor
55	SLEEP	I	Not used
56	POWER KEY	I	Power switch key detect signal input
57	JOG-	I	Jog dial signal input from the rotary encoder
58	JOG+	I	Jog dial signal input from the rotary encoder
59	VOL-	I	Volume signal input from the rotary encoder
60	VOL+	I	Volume signal input from the rotary encoder
61	DIN	O	Data signal output to the FL tube driver
62	CLK	O	Clock signal output to the FL tube driver
63	STB	O	Strobe signal output to the FL tube driver
64	CONTROL A1 OUT	O	Control A1 signal output
65	CONTROL A1 IN	I	Control A1 signal input
66	POWER RELAY	O	Power relay control signal output
67	PROTECTOR	I	Protector status detect signal input
68	HEADPHONE RELAY	O	Headphone relay control signal output
69	WOOFER RELAY	O	Woofer relay control signal output
70	REAR RELAY	O	Rear speaker relay control signal output
71	CENTRE RELAY	O	Centre speaker relay control signal output
72	FRONT RELAY	O	Front speaker relay control signal output
73	STEREO	I	Stereo tuning signal input from the tuner
74	TUNED	I	Tuning a frequency signal input from the tuner
75	MUTING	O	Muting signal output to the tuner
76	DO	I	Frequency data signal input from the tuner
77	RSTX	—	System reset
78	SCLK	O	Clock signal output to the tuner
79	X1A	—	Not used
80	X0A	—	Not used
81	VSS	—	Ground
82	X0	—	Connection for a crystal resonator
83	X1	—	Connection for a crystal resonator
84	VCC3	—	Power supply
85	—	—	Not used
86	SDATA	O	Data signal output to the tuner
87	SLATCH	O	Latch signal output to the tuner
88	S1	O	Video select control signal output
89	S2	O	Video select control signal output
90	MUTING1	O	Video muting control signal output
91	MUTING2	O	Video muting control signal output
92	OPTICAL IN SELECT	O	Optical in selector control signal output
93	XMODE	O	Reset signal output to DIR
94	CKSEL 1	O	CKSEL control signal to DIR
95	CLK	O	Clock signal output to DIR
96	CE	O	Chip enable signal output to DIR
97	DI	O	Data signal output to DIR
98	DO	I	Data signal input from DIR
99	ERROR	I	PLL error muting signal input from DIR
100	XSTATE	I	XSTATE data signal input from DIR

SECTION 4
EXPLODED VIEWS

NOTE:
- -XX, -X mean standardized parts, so they may have some differences from the original one.
- Items marked "*" are not stocked since they are seldom required for routine service. Some delay should be anticipated when ordering these items.
- Color Indication of Appearance Parts Example:
  KNOB, BALANCE (WHITE) . . . (RED)
  ↑ Parts of Color ↑ Cabinet's Color
- The mechanical parts with no reference number in the exploded views are not supplied.
- Accessories and packing materials are given in the last of this parts list.
- Abbreviation
  CND : Canadian model
  MY : Malaysia model
  SP : Singapore model
  TW : Taiwan model
  KR : Korea model
  MX : Mexican model
  AR : Argentina model
  CH : Chinese model
  AUS : Australian model

The components identified by mark ⚠ or dotted line with mark ⚠ are critical for safety. Replace only with part number specified.

Les composants identifiés par une marque ⚠ sont critiques pour la sécurité. Ne les remplacer que par une pièce portant le numéro spécifié.

以阴影和⚠标志来识别的零部件在安全方面具有关键性。因此只能以规定号码的零部件来更换。

4-1. FRONT PANEL SECTION

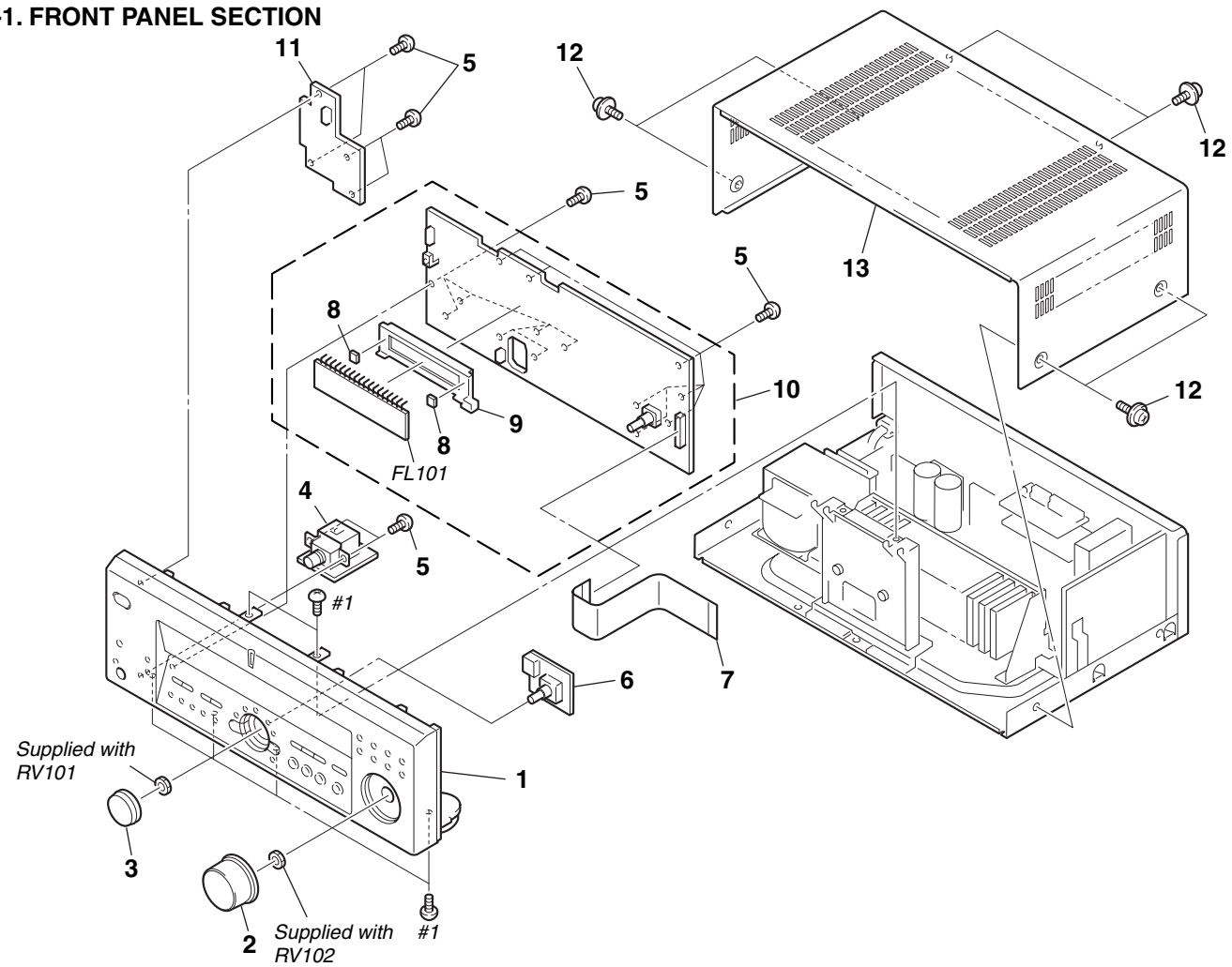

Ref. No.	Part No.	Description	Remarks
1	X-4953-423-1	FRONT PANEL ASSY (BLACK)(US)	
1	X-4953-464-1	FRONT PANEL ASSY (SILVER)(US)	
1	X-4953-465-1	FRONT PANEL ASSY (BLACK)(AEP,UK)	
1	X-4953-466-1	FRONT PANEL ASSY (BLACK)(E,AUS)	
1	X-4953-467-1	FRONT PANEL ASSY (SILVER)(AUS)	
1	X-4953-468-1	FRONT PANEL ASSY (GOLD)(MY,SP,TW,KR,CH)	
1	X-4953-525-1	FRONT PANEL ASSY (BLACK)(CND)	
1	X-4953-819-1	FRONT PANEL ASSY (SILVER)(E,MX,AR)	
2	4-232-113-01	KNOB (VOL)(FOR BLACK)(US,CND,AEP,UK,E,AUS)	
2	4-232-113-11	KNOB (VOL)(FOR SILVER)(US,E,MX,AR,AUS)	
2	4-232-113-21	KNOB (VOL)(FOR GOLD)(MY,SP,TW,KR,CH)	
3	4-232-239-01	KNOB (JOG)(FOR BLACK)(US,CND,AEP,UK,E,AUS)	
3	4-232-239-11	KNOB (JOG)(FOR GOLD)(MY,SP,TW,KR,CH)	
3	4-232-239-21	KNOB (JOG)(FOR SILVER)(US,E,MX,AR,AUS)	
4	1-680-529-11	HEADPHONE BOARD	
5	4-951-620-01	SCREW (2.6X8), +BVTP	
6	1-680-532-11	JOG BOARD	
7	1-773-250-11	WIRE (FLAT TYPE) (27 CORE)	
* 8	4-921-941-01	CUSHION (FL)	
* 9	3-386-245-11	HOLDER (FL)	
10	A-4475-808-A	DISPLAY BOARD, COMPLETE (US)	
10	A-4475-875-A	DISPLAY BOARD, COMPLETE (CND)	
10	A-4475-882-A	DISPLAY BOARD, COMPLETE (E)	
10	A-4475-888-A	DISPLAY BOARD, COMPLETE (AEP,UK,AR)	
10	A-4475-943-A	DISPLAY BOARD, COMPLETE (TW)	
10	A-4475-948-A	DISPLAY BOARD, COMPLETE (AUS)	
10	A-4475-951-A	DISPLAY BOARD, COMPLETE (CH,MY,SP,KR)	
10	A-4476-952-A	DISPLAY BOARD, COMPLETE (MX)	
11	1-680-528-11	POWER SWITCH BOARD	
12	4-210-291-01	SCREW (CASE 3 TP2)(US,CND,AEP,UK,E,AUS)	
12	4-210-291-11	SCREW (CASE 3 TP2)(MY,SP,TW,KR,MX,AR,CH)	
13	4-232-418-01	CASE (BLACK)(US,CND,AEP,UK,E,AUS)	
13	4-232-418-21	CASE (SILVER)(US,E,MX,AR,AUS)	
13	4-232-418-41	CASE (GOLD)(MY,SP,TW,KR,CH)	
FL101	1-518-718-11	INDICATOR TUBE, FLUORESCENT	
#1	7-685-646-79	SCREW +BVTP 3X8 TYPE2 IT-3	

4-2. CHASSIS SECTION

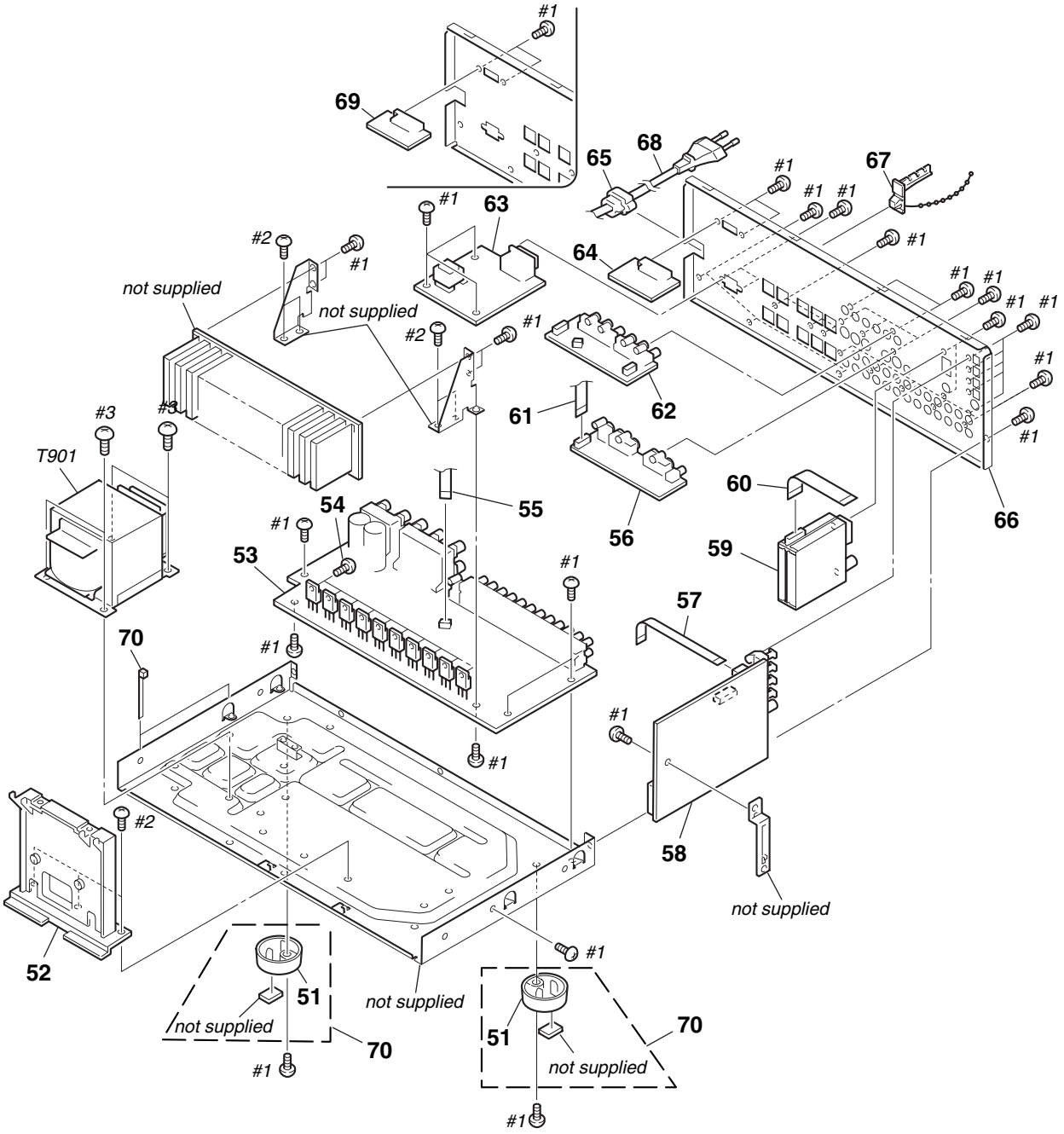

Ref. No.	Part No.	Description	Remarks
51	4-232-237-01	FOOT (DIA. 30)	
52	4-233-263-01	SUB MOLD (DE9)	
53	A-4475-797-A	MAIN BOARD, COMPLETE (US)	
53	A-4475-874-A	MAIN BOARD, COMPLETE (CND)	
53	A-4475-886-A	MAIN BOARD, COMPLETE (AEP,UK,E,MY,SP,TW,KR,MX,AR,CH,AUS)	
54	3-905-609-01	SCREW (TRANSISTOR)	
55	1-769-844-11	WIRE (FLAT TYPE) (5 CORE)	
56	1-680-538-11	S-VIDEO BOARD	
57	1-765-314-11	WIRE (FLAT TYPE) (7 CORE)	
58	A-4475-804-A	DIGITAL BOARD, COMPLETE (US)	
58	A-4475-878-A	DIGITAL BOARD, COMPLETE (CND)	
58	A-4475-884-A	DIGITAL BOARD, COMPLETE (E,TW,KR,MX)	
58	A-4475-889-A	DIGITAL BOARD, COMPLETE (AEP,UK)	
58	A-4475-949-A	DIGITAL BOARD, COMPLETE (AUS)	
58	A-4475-952-A	DIGITAL BOARD, COMPLETE (MY,SP,AR,CH)	
59	1-693-539-11	TUNER (US,CND,E,TW,MX,AR)	
59	1-693-540-11	TUNER (AEP,UK,MY,SP,KR,CH,AUS)	
60	1-773-004-11	WIRE (FLAT TYPE) (15 CORE)	
61	1-769-905-11	WIRE (FLAT TYPE) (9 CORE)	
62	1-680-533-11	VIDEO BOARD	
63	A-4475-803-A	STBY BOARD, COMPLETE (US,CND)	
63	A-4475-881-A	STBY BOARD, COMPLETE (E)	
63	A-4475-887-A	STBY BOARD, COMPLETE (AEP,UK,MY,SP)	
63	A-4475-942-A	STBY BOARD, COMPLETE (TW)	
63	A-4475-946-A	STBY BOARD, COMPLETE (CH)	
63	A-4475-947-A	STBY BOARD, COMPLETE (AUS)	
63	A-4476-944-A	STBY BOARD, COMPLETE (KR)	
63	A-4476-951-A	STBY BOARD, COMPLETE (MX)	
63	A-4476-954-A	STBY BOARD, COMPLETE (AR)	
64	1-680-534-11	AC SELECT BOARD (E)	
* 65	3-703-244-00	BUSHING (2104), CORD	
66	4-232-251-01	BACK PANEL (DE6)(US)	
66	4-232-251-11	BACK PANEL (DE6)(CND)	
66	4-232-251-21	BACK PANEL (DE6)(E)	
66	4-232-251-31	BACK PANEL (DE6)(AEP)	
66	4-232-251-41	BACK PANEL (DE6)(UK)	
66	4-232-251-51	BACK PANEL (DE6)(AUS)	
66	4-232-251-61	BACK PANEL (DE6)(MY,SP)	
66	4-232-251-71	BACK PANEL (DE6)(CH)	
66	4-232-251-81	BACK PANEL (DE6)(TW)	
66	4-234-509-01	BACK PANEL (DE6)(KR)	
66	4-234-509-11	BACK PANEL (DE6)(MX)	
66	4-234-509-21	BACK PANEL (DE6)(AR)	
67	4-956-370-12	BAND, PLUG FIXED(AUS)	
⚠68	1-696-847-11	CORD, POWER (AUS)	
⚠68	1-769-079-21	CORD, POWER (KR)	
⚠68	1-777-071-21	CORD, POWER (AEP,UK,E,MY,SP,TW,AR)	
⚠68	1-783-205-11	CORD, POWER (CH)	
⚠68	1-783-820-11	CORD, POWER (US,CND,MX)	
69	1-680-531-11	IMPEDANCE SELECT BOARD (US,CND)	
70	3-701-748-00	CLAMP	
⚠T901	1-435-436-11	TRANSFORMER, POWER (MX)	
⚠T901	1-435-897-11	POWER TRANSFORMER (US)	
⚠T901	1-435-898-11	POWER TRANSFORMER (CND)	
⚠T901	1-435-899-11	POWER TRANSFORMER (TW)	
⚠T901	1-435-900-11	POWER TRANSFORMER (KR,AR)	
⚠T901	1-435-901-11	POWER TRANSFORMER (E)	
⚠T901	1-435-902-11	POWER TRANSFORMER (AUS)	
⚠T901	1-435-903-11	POWER TRANSFORMER (AEP,UK,MY,SP,CH)	
#1	7-685-646-79	SCREW +BVTP 3X8 TYPE2 IT-3	
#2	7-685-645-79	SCREW +BVTP 3X6 TYPE2 N-S	
#3	7-685-880-09	SCREW +BVTT 4X6 (S) (AEP,UK,E,MY,SP,TW,KR,MX,AR,AUS,CH)	
#3	7-685-881-09	SCREW +BVTT 4X8 (S)(US,CND)	

The components identified by mark ⚠ or dotted line with mark ⚠ are critical for safety. Replace only with part number specified.	Les composants identifiés par une marque ⚠ sont critiques pour la sécurité. Ne les remplacer que par une pièce portant le numéro spécifié.	以阴影和 ⚠ 标志来识别的零部件，在安全方面具有关键性．因此只能以规定号码的零部件来更换．

AC SELECT | DIGITAL

SECTION 5
ELECTRICAL PARTS LIST

NOTE:
- Due to standardization, replacements in the parts list may be different from the parts specified in the diagrams or the components used on the set.
- -XX, -X mean standardized parts, so they may have some difference from the original one.
- Items marked "*" are not stocked since they are seldom required for routine service. Some delay should be anticipated when ordering these items.
- CAPACITORS:
  uF: µF
- RESISTORS
  All resistors are in ohms.
  METAL: metal-film resistor
  METAL OXIDE: Metal Oxide-film resistor
  F: nonflammable
- COILS
  uH: µH
- SEMICONDUCTORS
  In each case, u: µ, for example:
  uA...: µA... , uPA... , µPA... , uPB... , µPB... , uPC... , µPC... , uPD..., µPD...
- Abbreviation
  CND : Canadian model
  MY : Malaysia model
  SP : Singapore model
  TW : Taiwan model
  KR : Korea model
  MX : Mexican model
  AR : Argentina model
  CH : Chinese model
  AUS : Australian model

When indicating parts by reference number, please include the board name.

The components identified by mark ⚠ or dotted line with mark ⚠ are critical for safety. Replace only with part number specified.

Les composants identifiés par une marque ⚠ sont critiques pour la sécurité. Ne les remplacer que par une pièce portant le numéro spécifié.

以阴影和⚠标志来识别的零部件在安全方面具有关键性。因此只能以规定号码的零部件来更换。

Ref. No.	Part No.	Description			Remarks
	1-680-534-11	AC SELECT BOARD (E)			
		**********			
		< CONNECTOR >			
* CNP910	1-564-687-11	PIN, CONNECTOR 3P (E)			
		< SWITCH >			
S901	1-571-437-21	SWITCH, POWER VOLTAGE CHANGE (VOLTAGE SELECTOR)(E)			
**********					
	A-4475-804-A	DIGITAL BOARD, COMPLETE (US)			
		**********			
	A-4475-878-A	DIGITAL BOARD, COMPLETE (CND)			
		**********			
	A-4475-889-A	DIGITAL BOARD, COMPLETE (AEP,UK)			
		**********			
	A-4475-949-A	DIGITAL BOARD, COMPLETE (AUS)			
		**********			
	A-4475-952-A	DIGITAL BOARD, COMPLETE (MY,SP,AR,CH)			
		**********			
	A-4475-884-A	DIGITAL BOARD, COMPLETE (E,TW,MX,KR)			
		**********			
		< CAPACITOR >			
C1101	1-163-038-11	CERAMIC CHIP	0.1uF		25V
C1102	1-104-664-11	ELECT	47uF	20.00%	16V
C1103	1-163-038-11	CERAMIC CHIP	0.1uF		25V
C1104	1-162-974-11	CERAMIC CHIP	0.01uF		50V
C1105	1-104-664-11	ELECT	47uF	20.00%	16V
C1106	1-163-038-11	CERAMIC CHIP	0.1uF		25V
C1107	1-162-974-11	CERAMIC CHIP	0.01uF		50V
C1108	1-163-038-11	CERAMIC CHIP	0.1uF		25V
C1109	1-162-918-11	CERAMIC CHIP	18PF	5.00%	50V
C1110	1-162-918-11	CERAMIC CHIP	18PF	5.00%	50V
C1111	1-163-038-11	CERAMIC CHIP	0.1uF		25V
C1112	1-162-974-11	CERAMIC CHIP	0.01uF		50V
C1113	1-163-038-11	CERAMIC CHIP	0.1uF		25V
C1114	1-162-905-11	CERAMIC CHIP	1PF	0.25PF	50V
C1115	1-162-923-11	CERAMIC CHIP	47PF	5%	50V
C1116	1-126-934-11	ELECT	220uF	20.00%	10V
C1117	1-164-156-11	CERAMIC CHIP	0.1uF		25V
C1118	1-162-927-11	CERAMIC CHIP	100PF	5%	50V
C1119	1-126-965-11	ELECT	22uF	20.00%	50V
C1120	1-164-156-11	CERAMIC CHIP	0.1uF		25V
C1121	1-164-156-11	CERAMIC CHIP	0.1uF		25V
C1122	1-164-156-11	CERAMIC CHIP	0.1uF		25V
C1123	1-164-156-11	CERAMIC CHIP	0.1uF		25V
C1124	1-164-156-11	CERAMIC CHIP	0.1uF		25V
C1125	1-126-964-11	ELECT	10uF	20.00%	50V
C1126	1-126-964-11	ELECT	10uF	20.00%	50V
C1127	1-164-156-11	CERAMIC CHIP	0.1uF		25V
C1129	1-162-964-11	CERAMIC CHIP	0.001uF	10%	50V
C1201	1-163-038-11	CERAMIC CHIP	0.1uF		25V
C1202	1-163-038-11	CERAMIC CHIP	0.1uF		25V
C1203	1-163-038-11	CERAMIC CHIP	0.1uF		25V
C1204	1-163-038-11	CERAMIC CHIP	0.1uF		25V
C1205	1-164-156-11	CERAMIC CHIP	0.1uF		25V
C1206	1-163-038-11	CERAMIC CHIP	0.1uF		25V
C1207	1-164-156-11	CERAMIC CHIP	0.1uF		25V
C1208	1-163-038-11	CERAMIC CHIP	0.1uF		25V
C1209	1-163-038-11	CERAMIC CHIP	0.1uF		25V
C1210	1-163-038-11	CERAMIC CHIP	0.1uF		25V
C1211	1-126-964-11	ELECT	10uF	20.00%	50V
C1212	1-126-964-11	ELECT	10uF	20.00%	50V
C1213	1-163-038-11	CERAMIC CHIP	0.1uF		25V
C1214	1-163-038-11	CERAMIC CHIP	0.1uF		25V
C1216	1-162-927-11	CERAMIC CHIP	100PF	5%	50V
C1218	1-162-927-11	CERAMIC CHIP	100PF	5%	50V
C1301	1-163-259-91	CERAMIC CHIP	220PF	5.00%	50V (AEP,UK)
C1302	1-126-964-11	ELECT	10uF	20.00%	50V (AEP,UK)
C1303	1-126-964-11	ELECT	10uF	20.00%	50V (AEP,UK)
C1304	1-163-038-11	CERAMIC CHIP	0.1uF		25V (AEP,UK)
C1306	1-162-926-11	CERAMIC CHIP	82PF	5%	50V (AEP,UK)
C1307	1-162-923-11	CERAMIC CHIP	47PF	5%	50V (AEP,UK)
C1308	1-163-038-11	CERAMIC CHIP	0.1uF		25V (AEP,UK)
C1309	1-164-156-11	CERAMIC CHIP	0.1uF		25V
C1310	1-164-156-11	CERAMIC CHIP	0.1uF		25V
C1311	1-164-156-11	CERAMIC CHIP	0.1uF		25V
C1312	1-163-259-91	CERAMIC CHIP	220PF	5.00%	50V

Ref. No.	Part No.	Description			Remarks
C1313	1-163-259-91	CERAMIC CHIP	220PF	5.00%	50V
C1501	1-162-965-11	CERAMIC CHIP	0.0015uF	10%	50V
C1502	1-126-965-11	ELECT	22uF	20.00%	50V
C1503	1-163-038-11	CERAMIC CHIP	0.1uF		25V
C1504	1-126-964-11	ELECT	10uF	20.00%	50V
C1505	1-164-156-11	CERAMIC CHIP	0.1uF		25V
C1506	1-126-935-11	ELECT	470uF	20.00%	16V
C1507	1-126-964-11	ELECT	10uF	20.00%	50V
C1508	1-163-038-11	CERAMIC CHIP	0.1uF		25V
C1509	1-163-038-11	CERAMIC CHIP	0.1uF		25V
C1510	1-104-664-11	ELECT	47uF	20.00%	16V
C1513	1-163-038-11	CERAMIC CHIP	0.1uF		25V
C1514	1-164-156-11	CERAMIC CHIP	0.1uF		25V
C1515	1-126-964-11	ELECT	10uF	20.00%	50V
C1551	1-162-965-11	CERAMIC CHIP	0.0015uF	10%	50V
C1552	1-126-965-11	ELECT	22uF	20.00%	50V
C1601	1-163-038-11	CERAMIC CHIP	0.1uF		25V
C1602	1-163-038-11	CERAMIC CHIP	0.1uF		25V
C1603	1-163-038-11	CERAMIC CHIP	0.1uF		25V
C1604	1-163-038-11	CERAMIC CHIP	0.1uF		25V
C1605	1-163-038-11	CERAMIC CHIP	0.1uF		25V
C1606	1-104-664-11	ELECT	47uF	20.00%	16V
C1607	1-126-963-11	ELECT	4.7uF	20.00%	50V
C1608	1-162-974-11	CERAMIC CHIP	0.01uF		50V
C1609	1-162-974-11	CERAMIC CHIP	0.01uF		50V
C1610	1-162-974-11	CERAMIC CHIP	0.01uF		50V
C1611	1-162-974-11	CERAMIC CHIP	0.01uF		50V
C1612	1-164-156-11	CERAMIC CHIP	0.1uF		25V
C1613	1-162-995-11	CERAMIC CHIP	0.022uF		50V
C1614	1-162-995-11	CERAMIC CHIP	0.022uF		50V
C1615	1-162-995-11	CERAMIC CHIP	0.022uF		50V
C1616	1-162-995-11	CERAMIC CHIP	0.022uF		50V
C1617	1-126-957-11	ELECT	0.22uF	20.00%	50V
C1618	1-126-964-11	ELECT	10uF	20.00%	50V
C1619	1-163-038-11	CERAMIC CHIP	0.1uF		25V
C1620	1-126-960-11	ELECT	1uF	20.00%	50V
C1621	1-163-038-11	CERAMIC CHIP	0.1uF		25V
C1622	1-164-156-11	CERAMIC CHIP	0.1uF		25V
C1623	1-164-156-11	CERAMIC CHIP	0.1uF		25V
C1626	1-163-038-11	CERAMIC CHIP	0.1uF		25V
C1627	1-104-905-11	CAPACITOR	0.22F		5.5V
C1628	1-162-908-11	CERAMIC CHIP	3PF	0.25PF	50V
C1629	1-162-908-11	CERAMIC CHIP	3PF	0.25PF	50V
C1630	1-126-959-11	CAP, ELECT	0.47	20%	50V
C1901	1-164-156-11	CERAMIC CHIP	0.1uF		25V
C1902	1-164-156-11	CERAMIC CHIP	0.1uF		25V
C1903	1-126-936-11	ELECT	3300uF	20.00%	16V
C1905	1-164-156-11	CERAMIC CHIP	0.1uF		25V
C1906	1-126-935-11	ELECT	470uF	20.00%	10V
C1907	1-163-038-11	CERAMIC CHIP	0.1uF		25V
C1908	1-126-935-11	ELECT	470uF	20.00%	10V
C1909	1-164-156-11	CERAMIC CHIP	0.1uF		25V
C1910	1-126-935-11	ELECT	470uF	20.00%	10V
C1911	1-164-156-11	CERAMIC CHIP	0.1uF		25V
C1912	1-126-935-11	ELECT	470uF	20.00%	10V
C1913	1-126-964-11	ELECT	10uF	20.00%	50V

Ref. No.	Part No.	Description	Remarks
		< CONNECTOR >	
* CNP5	1-564-720-11	PIN, CONNECTOR (SMALL TYPE) 4P	
* CNP6	1-564-731-11	PIN, CONNECTOR (SMALL TYPE)15P	
* CNS1	1-573-829-11	CONNECTOR, BOARD TO BOARD 15P	
CNS2	1-784-041-11	CONNECTOR, BOARD TO BOARD 9P	
* CNS3	1-564-710-11	PIN, CONNECTOR (SMALL TYPE) 8P	
CNS4	1-569-327-11	SOCKET, CONNECTOR 27P	
CNS7	1-569-321-11	SOCKET, CONNECTOR 15P	
CNS8	1-568-439-11	SOCKET, CONNECTOR 7P	
		< DIODE >	
D1001	8-719-016-74	DIODE 1SS352-TPH3	
D1101	8-719-016-74	DIODE 1SS352-TPH3	
D1501	8-719-049-09	DIODE 1SS367-T3SONY	
D1502	8-719-049-09	DIODE 1SS367-T3SONY	
D1601	8-719-016-74	DIODE 1SS352-TPH3	
D1602	8-719-016-74	DIODE 1SS352-TPH3	
D1603	8-719-016-74	DIODE 1SS352-TPH3 (US,CND)	
D1901	8-719-053-18	DIODE 1SR154-400TE-25	
D1902	8-719-053-18	DIODE 1SR154-400TE-25	
D1903	8-719-053-18	DIODE 1SR154-400TE-25	
D1904	8-719-053-18	DIODE 1SR154-400TE-25	
D1911	8-719-053-18	DIODE 1SR154-400TE-25	
D1912	8-719-053-18	DIODE 1SR154-400TE-25	
D1913	8-719-053-18	DIODE 1SR154-400TE-25	
D1914	8-719-053-18	DIODE 1SR154-400TE-25	
		< FERRITE BEAD >	
FB1101	1-414-813-11	FERRITE 0UH	
FB1102	1-414-813-11	FERRITE 0UH	
FB1104	1-469-152-11	FERRITE 0UH	
--55 FB1105	1-469-152-11	FERRITE 0UH	
FB1201	1-414-813-11	FERRITE 0UH	
FB1202	1-414-813-11	FERRITE 0UH	
FB1203	1-469-152-11	FERRITE 0UH	
FB1204	1-469-152-11	FERRITE 0UH	
FB1501	1-414-813-11	FERRITE 0UH	
FB1502	1-414-813-11	FERRITE 0UH	
FB1601	1-414-813-11	FERRITE 0UH	
FB1602	1-414-813-11	FERRITE 0UH	
FB1603	1-414-813-11	FERRITE 0UH	
		< IC >	
IC1101	8-759-825-15	IC LC89056W-E	
IC1102	8-759-242-70	IC TC7WU04F (TE12R)	
IC1103	8-759-595-15	IC TC74ACT153AF (EL)	
IC1104	8-749-017-36	IC TORX-179 (DVD/LD IN)	
IC1105	8-749-923-05	TORX178B (TV/SAT IN)	
IC1106	8-749-923-05	TORX178B (MD/TAPE IN)	
IC1107	8-749-923-04	IC TOTX178A (MD/TAPE OUT)	
IC1201	8-759-698-76	IC CXD9617R	
IC1202	8-759-538-16	IC IDT71V016S15PH-AUTL	
IC1301	8-759-557-36	IC BU1924F-E2 (AEP, UK)	
IC1501	8-759-657-47	IC AK4527	
IC1502	8-759-636-74	IC NJM4565DD	
IC1503	8-759-701-75	IC NJM7805FA	
IC1552	8-759-636-74	IC NJM4565DD	
IC1601	8-759-832-67	IC MB90478PF-G-101-BND	

DIGITAL

Ref. No.	Part No.	Description			Remarks
IC1603	8-759-491-33	IC TC74VHCT08AF (EL)			
IC1605	8-759-544-04	IC NJM2103M-TE2			
IC1901	8-759-647-10	IC uPC2933HF			
IC1902	8-759-835-63	IC NJM2391DL1-26-TE1			
IC1903	8-759-647-11	IC uPC2905HF			
IC1904	8-759-647-10	IC uPC2933HF			
		< JACK >			
J1101	1-778-228-11	JACK, PIN 1P (DVD/LD IN)			
		< JUMPER RESISTOR >			
JR1102	1-216-295-11	SHORT	0		
JR1103	1-216-295-11	SHORT	0		
JR1111	1-216-295-11	SHORT	0 (EXCEPT US, CND)		
JR1116	1-216-295-11	SHORT	0		
JR1110	1-216-295-11	SHORT	0		
JR1112	1-216-295-11	SHORT	0		
JR1113	1-216-295-11	SHORT	0		
JR1114	1-216-295-11	SHORT	0		
JR1117	1-216-295-11	SHORT	0		
		< JUMPER >			
JWH200	1-164-124-11	CERAMIC	300PF	5.00%	50V
		< COIL >			
L1301	1-500-425-11	FERRITE	0uH (AEP,UK)		
L1901	1-216-295-11	SHORT	0		
		< TRANSISTOR >			
Q1601	8-729-027-43	TRANSISTOR	RT1N141C-TP-1		
Q1602	8-729-230-49	TRANSISTOR	2SC2712-YG-TE85L		
Q1603	8-729-230-49	TRANSISTOR	2SC2712-YG-TE85L		
Q1604	8-729-027-43	TRANSISTOR	RT1N141C-TP-1		
Q1605	8-729-113-69	TRANSISTOR	FN1F4M-T1M32		
Q1606	8-729-048-78	TRANSISTOR	2SD1733-TL-QR		
Q1607	8-729-230-49	TRANSISTOR 2SC2712-YG-TE85L (US,CND)			
		< RESISTOR >			
R1100	1-216-121-11	RES-CHIP	1M	5%	1/10W
R1101	1-216-073-00	METAL CHIP	10K	5%	1/10W
R1102	1-216-073-00	METAL CHIP	10K	5%	1/10W
R1104	1-216-025-11	RES-CHIP	100	5%	1/10W
R1105	1-216-065-00	RES-CHIP	4.7K	5%	1/10W
R1106	1-216-085-00	METAL CHIP	33K	5%	1/10W
R1107	1-216-067-00	METAL CHIP	5.6K	5%	1/10W
R1108	1-216-025-11	RES-CHIP	100	5%	1/10W
R1109	1-216-025-11	RES-CHIP	100	5%	1/10W
R1110	1-216-049-11	RES-CHIP	1K	5%	1/10W
R1111	1-216-049-11	RES-CHIP	1K	5%	1/10W
R1112	1-216-033-00	METAL CHIP	220	5%	1/10W
R1113	1-216-049-11	RES-CHIP	1K	5%	1/10W
R1114	1-216-025-11	RES-CHIP	100	5%	1/10W
R1115	1-216-073-00	METAL CHIP	10K	5%	1/10W
R1116	1-216-022-00	METAL CHIP	75	5%	1/10W
R1117	1-216-049-11	RES-CHIP	1K	5%	1/10W

Ref. No.	Part No.	Description			Remarks
R1118	1-216-115-00	METAL CHIP	560K	5%	1/10W
R1119	1-216-081-00	METAL CHIP	22K	5%	1/10W
R1120	1-216-025-11	RES-CHIP	100	5%	1/10W
R1121	1-216-025-11	RES-CHIP	100	5%	1/10W
R1122	1-216-025-11	RES-CHIP	100	5%	1/10W
R1123	1-216-025-11	RES-CHIP	100	5%	1/10W
R1124	1-216-025-11	RES-CHIP	100	5%	1/10W
R1201	1-216-073-00	METAL CHIP	10K	5%	1/10W
R1203	1-216-073-00	METAL CHIP	10K	5%	1/10W
R1204	1-216-049-11	RES-CHIP	1K	5%	1/10W
R1205	1-216-025-11	RES-CHIP	100	5%	1/10W
R1206	1-216-025-11	RES-CHIP	100	5%	1/10W
R1207	1-216-025-11	RES-CHIP	100	5%	1/10W
R1208	1-216-025-11	RES-CHIP	100	5%	1/10W
R1210	1-216-073-00	METAL CHIP	10K	5%	1/10W
R1212	1-216-295-11	SHORT	0		
R1213	1-216-295-11	SHORT	0		
R1214	1-216-073-11	RES-CHIP	10K	5%	1/10W
R1215	1-216-073-11	RES-CHIP	10K	5%	1/10W
R1216	1-216-073-11	RES-CHIP	10K	5%	1/10W
R1217	1-216-073-11	RES-CHIP	10K	5%	1/10W
R1218	1-216-073-11	RES-CHIP	10K	5%	1/10W
R1219	1-216-073-11	RES-CHIP	10K	5%	1/10W
R1220	1-216-073-11	RES-CHIP	10K	5%	1/10W
R1221	1-216-295-11	SHORT	0		
R1222	1-216-295-11	SHORT	0		
R1301	1-216-025-11	RES-CHIP	100	5%	1/10W (AEP,UK)
R1302	1-216-025-11	RES-CHIP	100	5%	1/10W (AEP,UK)
R1303	1-216-057-00	METAL CHIP	2.2K	5%	1/10W (AEP,UK)
R1304	1-216-089-11	RES-CHIP	47K	5%	1/10W
R1305	1-216-089-11	RES-CHIP	47K	5%	1/10W
R1308	1-216-049-11	RES-CHIP	1K	5%	1/10W
R1314	1-216-295-11	SHORT	0		
R1364	1-216-295-11	SHORT	0		
R1501	1-216-037-00	METAL CHIP	330	5%	1/10W
R1502	1-216-073-00	METAL CHIP	10K	5%	1/10W
R1503	1-216-073-00	METAL CHIP	10K	5%	1/10W
R1504	1-216-037-00	METAL CHIP	330	5%	1/10W
R1505	1-216-057-00	METAL CHIP	2.2K	5%	1/10W
R1506	1-216-073-00	METAL CHIP	10K	5%	1/10W
R1507	1-216-065-00	RES-CHIP	4.7K	5%	1/10W
R1508	1-216-097-11	RES-CHIP	100K	5%	1/10W
R1509	1-216-025-11	RES-CHIP	100	5%	1/10W
R1516	1-216-295-11	SHORT	0		
R1517	1-216-295-11	SHORT	0		
R1518	1-216-295-11	SHORT	0		
R1519	1-216-295-11	SHORT	0		
R1520	1-216-295-11	SHORT	0		
R1521	1-216-295-11	SHORT	0		
R1551	1-216-037-00	METAL CHIP	330	5%	1/10W
R1552	1-216-073-00	METAL CHIP	10K	5%	1/10W
R1553	1-216-073-00	METAL CHIP	10K	5%	1/10W
R1554	1-216-037-00	METAL CHIP	330	5%	1/10W
R1555	1-216-057-00	METAL CHIP	2.2K	5%	1/10W
R1556	1-216-073-00	METAL CHIP	10K	5%	1/10W

Ref. No.	Part No.	Description			Remarks
R1557	1-216-065-00	RES-CHIP	4.7K	5%	1/10W
R1600	1-216-065-00	RES-CHIP	4.7K	5%	1/10W
R1601	1-216-049-11	RES-CHIP	1K	5%	1/10W
R1602	1-216-065-00	RES-CHIP	4.7K	5%	1/10W
R1603	1-216-049-11	RES-CHIP	1K	5%	1/10W
R1604	1-216-049-11	RES-CHIP	1K	5%	1/10W
R1605	1-216-049-11	RES-CHIP	1K	5%	1/10W
R1606	1-216-049-11	RES-CHIP	1K	5%	1/10W
R1607	1-216-049-11	RES-CHIP	1K	5%	1/10W
R1608	1-216-049-11	RES-CHIP	1K	5%	1/10W
R1609	1-216-049-11	RES-CHIP	1K	5%	1/10W
R1610	1-216-049-11	RES-CHIP	1K	5%	1/10W
R1611	1-216-049-11	RES-CHIP	1K	5%	1/10W
R1612	1-216-049-11	RES-CHIP	1K	5%	1/10W
R1613	1-216-049-11	RES-CHIP	1K	5%	1/10W
R1614	1-216-049-11	RES-CHIP	1K	5%	1/10W
R1615	1-216-049-11	RES-CHIP	1K	5%	1/10W
R1616	1-216-049-11	RES-CHIP	1K	5%	1/10W
R1617	1-216-049-11	RES-CHIP	1K	5%	1/10W
R1618	1-216-049-11	RES-CHIP	1K	5%	1/10W
R1619	1-216-049-11	RES-CHIP	1K	5%	1/10W
R1620	1-216-049-11	RES-CHIP	1K	5%	1/10W
R1621	1-216-049-11	RES-CHIP	1K	5%	1/10W
R1623	1-216-073-00	METAL CHIP	10K	5%	1/10W
R1624	1-216-073-00	METAL CHIP	10K	5%	1/10W
R1625	1-216-073-00	METAL CHIP	10K	5%	1/10W
R1626	1-216-073-00	METAL CHIP	10K	5%	1/10W
R1627	1-216-073-00	METAL CHIP	10K	5%	1/10W
R1628	1-216-073-00	METAL CHIP	10K	5%	1/10W
R1629	1-216-073-00	METAL CHIP	10K	5%	1/10W
R1630	1-216-073-00	METAL CHIP	10K	5%	1/10W
R1631	1-216-065-00	RES-CHIP	4.7K	5%	1/10W
R1632	1-216-069-00	METAL CHIP	6.8K	5%	1/10W
R1633	1-216-085-00	METAL CHIP	33K	5%	1/10W
R1634	1-216-077-00	RES-CHIP	15K	5%	1/10W (AEP,UK)
R1634	1-216-085-00	METAL CHIP	33K	5%	1/10W (AUS)
R1634	1-216-081-00	METAL CHIP	22K	5%	1/10W (MY,SP,AR,CH)
R1634	1-216-073-00	METAL CHIP	10K	5%	1/10W (E,TW,KR,MX)
R1635	1-216-073-00	METAL CHIP	10K	5%	1/10W
R1636	1-216-073-00	METAL CHIP	10K	5%	1/10W
R1638	1-216-065-00	RES-CHIP	4.7K	5%	1/10W
R1639	1-216-049-11	RES-CHIP	1K	5%	1/10W
R1640	1-216-049-11	RES-CHIP	1K	5%	1/10W
R1641	1-216-049-11	RES-CHIP	1K	5%	1/10W
R1642	1-216-073-00	METAL CHIP	10K	5%	1/10W
R1643	1-216-049-11	RES-CHIP	1K	5%	1/10W
R1644	1-216-049-11	RES-CHIP	1K	5%	1/10W
R1645	1-216-049-11	RES-CHIP	1K	5%	1/10W
R1646	1-216-049-11	RES-CHIP	1K	5%	1/10W
R1647	1-216-049-11	RES-CHIP	1K	5%	1/10W
R1648	1-216-049-11	RES-CHIP	1K	5%	1/10W
R1649	1-216-049-11	RES-CHIP	1K	5%	1/10W
R1650	1-216-073-00	METAL CHIP	10K	5%	1/10W
R1651	1-216-073-00	METAL CHIP	10K	5%	1/10W
R1652	1-216-073-00	METAL CHIP	10K	5%	1/10W
R1653	1-216-073-00	METAL CHIP	10K	5%	1/10W
R1654	1-216-073-00	METAL CHIP	10K	5%	1/10W
R1655	1-216-073-00	METAL CHIP	10K	5%	1/10W
R1656	1-216-073-00	METAL CHIP	10K	5%	1/10W
R1657	1-216-073-00	METAL CHIP	10K	5%	1/10W
R1658	1-216-097-11	RES-CHIP	100K	5%	1/10W
R1659	1-216-049-11	RES-CHIP	1K	5%	1/10W
R1660	1-216-061-00	METAL CHIP	3.3K	5%	1/10W
R1661	1-216-073-00	METAL CHIP	10K	5%	1/10W
R1662	1-216-077-00	RES-CHIP	15K	5%	1/10W
R1663	1-216-059-00	METAL CHIP	2.7K	5%	1/10W
R1664	1-216-071-00	METAL CHIP	8.2K	5%	1/10W
R1665	1-216-081-00	METAL CHIP	22K	5%	1/10W
R1666	1-216-089-11	RES-CHIP	47K	5%	1/10W
R1667	1-216-057-00	METAL CHIP	2.2K	5%	1/10W
R1668	1-216-067-00	METAL CHIP	5.6K	5%	1/10W
R1669	1-216-065-00	RES-CHIP	4.7K	5%	1/10W
R1670	1-216-073-00	METAL CHIP	10K	5%	1/10W
R1671	1-216-073-00	METAL CHIP	10K	5%	1/10W (US,CND)
R1672	1-216-073-00	METAL CHIP	10K	5%	1/10W (US,CND)
R1673	1-216-049-11	RES-CHIP	1K	5%	1/10W
R1674	1-216-049-11	RES-CHIP	1K	5%	1/10W
R1675	1-216-049-11	RES-CHIP	1K	5%	1/10W
R1676	1-216-049-11	RES-CHIP	1K	5%	1/10W
R1677	1-216-049-11	RES-CHIP	1K	5%	1/10W
R1678	1-216-049-11	RES-CHIP	1K	5%	1/10W
R1679	1-216-049-11	RES-CHIP	1K	5%	1/10W
R1680	1-216-049-11	RES-CHIP	1K	5%	1/10W
R1681	1-216-049-11	RES-CHIP	1K	5%	1/10W
R1682	1-216-097-11	RES-CHIP	100K	5%	1/10W
R1683	1-216-073-00	METAL CHIP	10K	5%	1/10W
R1684	1-216-073-00	METAL CHIP	10K	5%	1/10W
R1685	1-216-073-00	METAL CHIP	10K	5%	1/10W
R1686	1-216-073-00	METAL CHIP	10K	5%	1/10W
R1688	1-216-295-11	SHORT	0		
R1690	1-216-049-11	RES-CHIP	1K	5%	1/10W
R1691	1-216-073-00	METAL CHIP	10K	5%	1/10W
R1692	1-216-073-00	METAL CHIP	10K	5%	1/10W
R1693	1-216-073-00	METAL CHIP	10K	5%	1/10W
R1694	1-216-049-11	RES-CHIP	1K	5%	1/10W
R1696	1-216-073-00	METAL CHIP	10K	5%	1/10W
R1697	1-216-295-11	SHORT	0		(US,CND)
R1697	1-216-045-00	METAL CHIP	680	5%	1/10W (AEP,UK)
R1697	1-216-069-00	METAL CHIP	6.8K	5%	1/10W (AUS)
R1697	1-216-057-00	METAL CHIP	2.2K	5%	1/10W (MY,SP,AR,CH)
R1697	1-216-061-00	METAL CHIP	3.3K	5%	1/10W (E,TW,KR,MX)
R1698	1-216-065-00	RES-CHIP	4.7K	5%	1/10W
R1699	1-216-065-00	RES-CHIP	4.7K	5%	1/10W
R1701	1-216-073-00	METAL CHIP	10K	5%	1/10W
R1702	1-216-073-00	METAL CHIP	10K	5%	1/10W
R1703	1-216-073-00	METAL CHIP	10K	5%	1/10W
R1704	1-216-073-00	METAL CHIP	10K	5%	1/10W
⚠R1901	1-243-635-11	FUSIBLE	0.33	5%	1/2W

The components identified by mark ⚠ or dotted line with mark ⚠ are critical for safety. Replace only with part number specified.	Les composants identifiés par une marque ⚠ sont critiques pour la sécurité. Ne les remplacer que par une pièce portant le numéro spécifié.	以阴影和 ⚠ 标志来识别的零部件，在安全方面具有关键性，因此只能以规定号码的零部件来更换。

DIGITAL DISPLAY

Ref. No.	Part No.	Description			Remarks
R1902	1-220-753-11	CEMENTED	6.8	5%	5W
		< VIBRATOR >			
X1101	1-781-465-21	VIBRATOR, CRYSTAL 12.288MHz			
X1201	1-795-264-21	VIBRATOR, CERAMIC 13.5 MHz			
X1301	1-579-900-21	VIBRATOR, CRYSTAL 4.33MHz (AEP,UK)			
X1601	1-795-318-11	OSCILLATOR, CERAMIC 20.0MHz			
**********					
	A-4475-808-A	DISPLAY BOARD, COMPLETE (US)			
		**********			
	A-4475-875-A	DISPLAY BOARD, COMPLETE (CND)			
		**********			
	A-4475-888-A	DISPLAY BOARD, COMPLETE (AEP,UK,AR)			
		**********			
	A-4475-948-A	DISPLAY BOARD, COMPLETE (AUS)			
		**********			
	A-4475-951-A	DISPLAY BOARD, COMPLETE (MY,SP,KR,CH)			
		**********			
	A-4475-882-A	DISPLAY BOARD, COMPLETE (E)			
		**********			
	A-4476-952-A	DISPLAY BOARD, COMPLETE (MX)			
		**********			
	A-4475-943-A	DISPLAY BOARD, COMPLETE (TW)			
		**********			
*	3-386-245-11	HOLDER (FL)			
*	4-921-941-01	CUSHION (FL)			
		< CAPACITOR >			
C100	1-164-159-11	CERAMIC	0.1uF		50V
C101	1-164-159-11	CERAMIC	0.1uF		50V
C104	1-164-159-11	CERAMIC	0.1uF		50V
C105	1-126-795-11	ELECT	10uF	20.00%	50V
C108	1-164-159-11	CERAMIC	0.1uF		50V
C109	1-164-159-11	CERAMIC	0.1uF		50V
C110	1-128-809-11	CERAMIC	100PF	5%	50V
C111	1-128-809-11	CERAMIC	100PF	5%	50V
C112	1-128-809-11	CERAMIC	100PF	5%	50V
C114	1-164-159-11	CERAMIC	0.1uF		50V
C115	1-126-795-11	ELECT	10uF	20.00%	50V
C144	1-164-159-11	CERAMIC	0.1uF		50V
C150	1-164-159-11	CERAMIC	0.1uF		50V
C151	1-126-795-11	ELECT	10uF	20.00%	50V
		< CONNECTOR >			
CNP102	1-691-765-11	PLUG (MICRO CONNECTOR) 3P			
CNS100	1-569-327-11	SOCKET, CONNECTOR 27P			
		< DIODE >			
D100	8-719-075-59	DIODE SELS5B23C-TP15 (Digital Cinema Sound)			
D101	8-719-046-39	DIODE SEL5821A-TP15 (EQ)			
D102	8-719-084-07	DIODE SEL5E20CTP15 (MULTI CHANNEL DECODING)			
D103	8-719-046-39	DIODE SEL5821A-TP15 (A.F.D.)			
D104	8-719-046-39	DIODE SEL5821A-TP15 (2CH)			
D105	8-719-046-39	DIODE SEL5821A-TP15 (MODE)			
D106	8-719-046-39	DIODE SEL5821A-TP15 (SUR)			
D107	8-719-046-39	DIODE SEL5821A-TP15 (LEVEL)			
D108	8-719-046-39	DIODE SEL5821A-TP15 (NAME)			
D109	8-719-046-39	DIODE SEL5821A-TP15 (SET UP)			

Ref. No.	Part No.	Description			Remarks
		< FILTER >			
FL101	1-518-718-11	INDICATOR TUBE, FLUORESCENT			
		< IC >			
IC100	8-759-643-83	IC uPD16315GB-3BS			
IC101	8-759-491-33	IC TC74VHCT08AF(EL)			
IC102	8-749-011-22	IC GP1U27X (REMOTE CONTROL)			
		< TRANSISTOR >			
Q100	8-729-119-78	TRANSISTOR	2SC2785TP-HFE		
Q101	8-729-119-78	TRANSISTOR	2SC2785TP-HFE		
Q102	8-729-119-78	TRANSISTOR	2SC2785TP-HFE		
Q103	8-729-119-78	TRANSISTOR	2SC2785TP-HFE		
Q104	8-729-119-78	TRANSISTOR	2SC2785TP-HFE		
Q105	8-729-119-78	TRANSISTOR	2SC2785TP-HFE		
		< RESISTOR >			
R100	1-249-413-11	CARBON	470	5%	1/4W F
R101	1-249-417-11	CARBON	1K	5%	1/4W F
R102	1-249-417-11	CARBON	1K	5%	1/4W F
R103	1-249-421-11	CARBON	2.2K	5%	1/4W F
R104	1-249-421-11	CARBON	2.2K	5%	1/4W F
R105	1-249-425-11	CARBON	4.7K	5%	1/4W F
R106	1-249-429-11	CARBON	10K	5%	1/4W
R107	1-249-413-11	CARBON	470	5%	1/4W F
R108	1-249-417-11	CARBON	1K	5%	1/4W F
R109	1-249-417-11	CARBON	1K	5%	1/4W F
R110	1-249-421-11	CARBON	2.2K	5%	1/4W F
R111	1-249-421-11	CARBON	2.2K	5%	1/4W F
R112	1-249-425-11	CARBON	4.7K	5%	1/4W F
R113	1-249-429-11	CARBON	10K	5%	1/4W
R114	1-249-433-11	CARBON	22K	5%	1/4W
R115	1-249-437-11	CARBON	47K	5%	1/4W
R116	1-249-413-11	CARBON	470	5%	1/4W F
R117	1-249-417-11	CARBON	1K	5%	1/4W F
R118	1-249-417-11	CARBON	1K	5%	1/4W F
R119	1-249-421-11	CARBON	2.2K	5%	1/4W F
R120	1-249-421-11	CARBON	2.2K	5%	1/4W F
R121	1-249-425-11	CARBON	4.7K	5%	1/4W F
R122	1-249-429-11	CARBON	10K	5%	1/4W
R123	1-249-433-11	CARBON	22K	5%	1/4W (AEP,UK,AR)
R125	1-249-413-11	CARBON	470	5%	1/4W F
R126	1-249-417-11	CARBON	1K	5%	1/4W F
R127	1-249-417-11	CARBON	1K	5%	1/4W F
R128	1-249-421-11	CARBON	2.2K	5%	1/4W F
R129	1-249-421-11	CARBON	2.2K	5%	1/4W F
R130	1-249-425-11	CARBON	4.7K	5%	1/4W F
R131	1-249-429-11	CARBON	10K	5%	1/4W
R137	1-249-403-11	CARBON	68	5%	1/4W F
R138	1-249-409-11	CARBON	220	5%	1/4W F
R139	1-249-409-11	CARBON	220	5%	1/4W F
R140	1-249-409-11	CARBON	220	5%	1/4W F
R141	1-249-421-11	CARBON	2.2K	5%	1/4W F
R142	1-249-421-11	CARBON	2.2K	5%	1/4W F
R143	1-249-421-11	CARBON	2.2K	5%	1/4W F
R144	1-249-421-11	CARBON	2.2K	5%	1/4W F
R145	1-249-409-11	CARBON	220	5%	1/4W F

Ref. No.	Part No.	Description				Remarks
R146	1-249-421-11	CARBON	2.2K	5%	1/4W	F
R147	1-249-409-11	CARBON	220	5%	1/4W	F
R148	1-249-421-11	CARBON	2.2K	5%	1/4W	F
R149	1-249-409-11	CARBON	220	5%	1/4W	F
R150	1-249-409-11	CARBON	220	5%	1/4W	F
R151	1-249-409-11	CARBON	220	5%	1/4W	F
R152	1-249-409-11	CARBON	220	5%	1/4W	F
R153	1-247-807-31	CARBON	100	5%	1/4W	
R158	1-249-440-11	CARBON	82K	5%	1/4W	
⚠R198	1-249-381-11	CARBON	1	5%	1/4W	F
⚠R199	1-249-381-11	CARBON	1	5%	1/4W	F
		< VARIABLE RESISTOR >				
RV102	1-418-773-11	ENCODER, ROTARY (MASTER VOLUME)				
		< SWITCH >				
S100	1-762-875-21	SWITCH, TACTILE (MUTING)				
S101	1-762-875-21	SWITCH, TACTILE (MODE)				
S102	1-762-875-21	SWITCH, TACTILE (MULTI CH IN)				
S103	1-762-875-21	SWITCH, TACTILE (INPUT MODE)				
S104	1-762-875-21	SWITCH, TACTILE (TV/SAT)				
S105	1-762-875-21	SWITCH, TACTILE (CD)				
S106	1-762-875-21	SWITCH, TACTILE (TUNER)				
S107	1-762-875-21	SWITCH, TACTILE (VIDEO2)				
S108	1-762-875-21	SWITCH, TACTILE (TUNING -)				
S109	1-762-875-21	SWITCH, TACTILE (PRESET TUNING -)				
S110	1-762-875-21	SWITCH, TACTILE (SET UP)				
S111	1-762-875-21	SWITCH, TACTILE (NAME)				
S112	1-762-875-21	SWITCH, TACTILE (ENTER)				
S113	1-762-875-21	SWITCH, TACTILE (LEVEL)				
S114	1-762-875-21	SWITCH, TACTILE (SUR)				
S115	1-762-875-21	SWITCH, TACTILE (DVD/LD)				
S116	1-762-875-21	SWITCH, TACTILE (VIDEO1)				
S117	1-762-875-21	SWITCH, TACTILE (MD/TAPE)				
S118	1-762-875-21	SWITCH, TACTILE (AM)				
S119	1-762-875-21	SWITCH, TACTILE (FM)				
S120	1-762-875-21	SWITCH, TACTILE (<)				
S121	1-762-875-21	SWITCH, TACTILE (>)				
S122	1-762-875-21	SWITCH, TACTILE (SHIFT)				
S123	1-762-875-21	SWITCH, TACTILE (TUNING +)				
S124	1-762-875-21	SWITCH, TACTILE (PRESET TUNING +)				
S125	1-762-875-21	SWITCH, TACTILE (MEMORY)				
S126	1-762-875-21	SWITCH, TACTILE (FM MODE)(AEP,UK,AR)				
S128	1-762-875-21	SWITCH, TACTILE (AUX)				
S129	1-762-875-21	SWITCH, TACTILE (CINEMA STUDIO EX C)				
S130	1-762-875-21	SWITCH, TACTILE (CINEMA STUDIO EX B)				
S131	1-762-875-21	SWITCH, TACTILE (CINEMA STUDIO EX A)				
S132	1-762-875-21	SWITCH, TACTILE (EQ)				
S133	1-762-875-21	SWITCH, TACTILE (EQUALIZER)				
S134	1-762-875-21	SWITCH, TACTILE (A.F.D.)				
S135	1-762-875-21	SWITCH, TACTILE (2CH)				

****

	1-680-529-11	HEADPHONE BOARD **********				
		< CAPACITOR >				
C790	1-128-809-11	CERAMIC	100PF	5%	50V	

Ref. No.	Part No.	Description				Remarks
		< CONNECTOR >				
CNP791	1-691-766-11	PLUG (MICRO CONNECTOR) 4P				
		< DIODE >				
D790	8-719-210-21	DIODE 11EQS04-NTA2B				
		< JACK >				
J791	1-815-314-21	JACK (PHONES)(US,CND,AEP,UK,E,MX,AR,AUS)				
J791	1-815-313-21	JACK (PHONES)(MY,SP,TW,KR,CH)				

****

	1-680-531-11	IMPEDANCE SELECT BOARD (US,CND) **********				
		< CONNECTOR >				
* CNP803	1-564-242-00	PIN, CONNECTOR 5P (US,CND)				
		< DIODE >				
D810	8-719-024-99	DIODE 11ES2-NTA2B (US,CND)				
D811	8-719-024-99	DIODE 11ES2-NTA2B (US,CND)				
		< FUSIBLE RESISTOR >				
⚠RF801	1-240-877-11	RES, NONFLAMMABE FUSE	0.15	5%	1/2W	
		< SWITCH >				
S902	1-786-107-11	SLIDE SWITCH (IMPEDANCE SELECTOR)				(US,CND)

****

	1-680-532-11	JOG BOARD **********				
		< CONNECTOR >				
* CN101	1-564-719-11	PIN, CONNECTOR (SMALL TYPE) 3P				
		< VARIABLE RESISTOR >				
RV101	1-418-817-11	ENCODER, ROTARY (JOG DIAL)				

****

	A-4475-797-A	MAIN BOARD, COMPLETE (US) **********				
	A-4475-874-A	MAIN BOARD, COMPLETE (CND) **********				
	A-4475-886-A	MAIN BOARD, COMPLETE **********				
		(AEP,UK,E,MY,SP,TW,KR,MX,AR,CH,AUS)				
	7-685-646-79	SCREW +BVTP 3X8 TYPE2 IT-3				
		< CAPACITOR >				
C371	1-128-809-11	CERAMIC	100PF	5%	50V	
C372	1-128-809-11	CERAMIC	100PF	5%	50V	
C373	1-128-809-11	CERAMIC	100PF	5%	50V	
C374	1-128-809-11	CERAMIC	100PF	5%	50V	
C375	1-128-809-11	CERAMIC	100PF	5%	50V	
C376	1-128-809-11	CERAMIC	100PF	5%	50V	
C400	1-162-302-11	CERAMIC	0.0022uF	20.00%	16V	

The components identified by mark ⚠ or dotted line with mark ⚠ are critical for safety.
Replace only with part number specified.

Les composants identifiés par une marque ⚠ sont critiques pour la sécurité.
Ne les remplacer que par une pièce portant le numéro spécifié.

以阴影和 ⚠ 标志来识别的零部件，在安全方面具有关键性，因此只能以规定号码的零部件来更换。

MAIN

Ref. No.	Part No.	Description			Remarks
C401	1-126-964-11	ELECT	10uF	20.00%	50V
C402	1-126-964-11	ELECT	10uF	20.00%	50V
C403	1-126-964-11	ELECT	10uF	20.00%	50V
C404	1-126-964-11	ELECT	10uF	20.00%	50V
C405	1-126-964-11	ELECT	10uF	20.00%	50V
C406	1-126-964-11	ELECT	10uF	20.00%	50V
C407	1-126-964-11	ELECT	10uF	20.00%	50V
C408	1-126-964-11	ELECT	10uF	20.00%	50V
C409	1-126-964-11	ELECT	10uF	20.00%	50V
C411	1-126-961-11	ELECT	2.2uF	20.00%	50V
C412	1-126-961-11	ELECT	2.2uF	20.00%	50V
C413	1-126-964-11	ELECT	10uF	20.00%	50V
C414	1-126-964-11	ELECT	10uF	20.00%	50V
C415	1-126-964-11	ELECT	10uF	20.00%	50V
C416	1-126-964-11	ELECT	10uF	20.00%	50V
C417	1-126-964-11	ELECT	10uF	20.00%	50V
C418	1-126-964-11	ELECT	10uF	20.00%	50V
C419	1-126-964-11	ELECT	10uF	20.00%	50V
C431	1-126-961-11	ELECT	2.2uF	20.00%	50V
C432	1-126-961-11	ELECT	2.2uF	20.00%	50V
C433	1-126-964-11	ELECT	10uF	20.00%	50V
C451	1-126-964-11	ELECT	10uF	20.00%	50V
C452	1-126-964-11	ELECT	10uF	20.00%	50V
C453	1-126-964-11	ELECT	10uF	20.00%	50V
C454	1-126-964-11	ELECT	10uF	20.00%	50V
C455	1-126-964-11	ELECT	10uF	20.00%	50V
C456	1-126-964-11	ELECT	10uF	20.00%	50V
C457	1-126-964-11	ELECT	10uF	20.00%	50V
C458	1-126-964-11	ELECT	10uF	20.00%	50V
C459	1-126-964-11	ELECT	10uF	20.00%	50V
C461	1-126-961-11	ELECT	2.2uF	20.00%	50V
C462	1-126-961-11	ELECT	2.2uF	20.00%	50V
C464	1-164-159-11	CERAMIC	0.1uF		50V
C465	1-126-964-11	ELECT	10uF	20.00%	50V
C466	1-126-964-11	ELECT	10uF	20.00%	50V
C467	1-164-159-11	CERAMIC	0.1uF		50V
C471	1-126-963-11	ELECT	4.7uF	20.00%	50V
C481	1-126-964-11	ELECT	10uF	20.00%	50V
C482	1-126-964-11	ELECT	10uF	20.00%	50V
C483	1-126-964-11	ELECT	10uF	20.00%	50V
C484	1-126-964-11	ELECT	10uF	20.00%	50V
C485	1-126-964-11	ELECT	10uF	20.00%	50V
C486	1-126-964-11	ELECT	10uF	20.00%	50V
C487	1-126-964-11	ELECT	10uF	20.00%	50V
C488	1-164-159-11	CERAMIC	0.1uF		50V
C489	1-128-809-11	CERAMIC	100PF	5%	50V
C490	1-128-809-11	CERAMIC	100PF	5%	50V
C491	1-126-964-11	ELECT	10uF	20.00%	50V
C492	1-126-964-11	ELECT	10uF	20.00%	50V
C493	1-126-964-11	ELECT	10uF	20.00%	50V
C494	1-126-964-11	ELECT	10uF	20.00%	50V
C495	1-126-964-11	ELECT	10uF	20.00%	50V
C496	1-126-963-11	ELECT	4.7uF	20.00%	50V
C497	1-128-809-11	CERAMIC	100PF	5%	50V
C498	1-128-805-11	CERAMIC	47PF	5%	50V (US)
C498	1-128-815-11	CERAMIC	330PF	5%	50V (EXCEPT US)
C500	1-162-302-11	CERAMIC	0.0022uF	20.00%	16V
C501	1-126-963-11	ELECT	4.7uF	20.00%	50V
C503	1-104-665-11	ELECT	100uF	20.00%	10V
C504	1-107-583-11	CERAMIC	3PF	0.25PF	500V
C505	1-102-989-00	CERAMIC	68PF	5.00%	500V
C506	1-102-989-00	CERAMIC	68PF	5.00%	500V
C507	1-128-809-11	CERAMIC	100PF	5%	50V
C510	1-104-664-11	ELECT	47uF	20.00%	25V
C511	1-136-157-00	FILM	0.022uF	5.00%	50V
C519	1-128-813-11	CERAMIC	220PF	5%	50V
C540	1-126-964-11	ELECT	10uF	20.00%	50V
C600	1-162-302-11	CERAMIC	0.0022uF	20.00%	16V
C601	1-126-963-11	ELECT	4.7uF	20.00%	50V
C603	1-104-665-11	ELECT	100uF	20.00%	10V
C604	1-107-583-11	CERAMIC	3PF	0.25PF	500V
C605	1-102-233-00	CERAMIC	33PF	10.00%	500V
C606	1-128-809-11	CERAMIC	100PF	5%	50V
C607	1-128-809-11	CERAMIC	100PF	5%	50V
C610	1-104-664-11	ELECT	47uF	20.00%	25V
C611	1-136-157-00	FILM	0.022uF	5.00%	50V
C616	1-106-355-12	MYLAR	3300PF	5%	200V
C617	1-106-355-12	MYLAR	3300PF	5%	200V
C619	1-128-813-11	CERAMIC	220PF	5%	50V
C640	1-126-964-11	ELECT	10uF	20.00%	50V
C651	1-126-963-11	ELECT	4.7uF	20.00%	50V
C653	1-104-665-11	ELECT	100uF	20.00%	10V
C654	1-107-583-11	CERAMIC	3PF	0.25PF	500V
C655	1-102-233-00	CERAMIC	33PF	10.00%	500V
C656	1-128-809-11	CERAMIC	100PF	5%	50V
C657	1-128-809-11	CERAMIC	100PF	5%	50V
C660	1-104-664-11	ELECT	47uF	20.00%	25V
C661	1-136-157-00	FILM	0.022uF	5.00%	50V
C670	1-128-813-11	CERAMIC	220PF	5%	50V
C680	1-126-964-11	ELECT	10uF	20.00%	50V
C691	1-164-159-11	CERAMIC	0.1uF		50V
C700	1-162-302-11	CERAMIC	0.0022uF	20.00%	16V
C701	1-126-963-11	ELECT	4.7uF	20.00%	50V
C703	1-104-665-11	ELECT	100uF	20.00%	10V
C704	1-107-583-11	CERAMIC	3PF	0.25PF	500V
C705	1-102-233-00	CERAMIC	33PF	10.00%	500V
C706	1-128-809-11	CERAMIC	100PF	5%	50V
C707	1-128-809-11	CERAMIC	100PF	5%	50V
C710	1-104-664-11	ELECT	47uF	20.00%	25V
C711	1-136-157-00	FILM	0.022uF	5.00%	50V
C720	1-128-813-11	CERAMIC	220PF	5%	50V
C721	1-126-934-11	ELECT	220uF	20.00%	10V
C722	1-126-964-11	ELECT	10uF	20.00%	50V
C732	1-128-582-11	ELECT	10uF	20.00%	100V
C733	1-128-582-11	ELECT	10uF	20.00%	100V
C740	1-126-964-11	ELECT	10uF	20.00%	50V
C741	1-128-579-11	ELECT	2.2uF	20.00%	100V
C750	1-126-964-11	ELECT	10uF	20.00%	50V
C751	1-126-963-11	ELECT	4.7uF	20.00%	50V
C753	1-104-665-11	ELECT	100uF	20.00%	10V
C754	1-107-583-11	CERAMIC	3PF	0.25PF	500V
C755	1-102-233-00	CERAMIC	33PF	10.00%	500V
C756	1-128-809-11	CERAMIC	100PF	5%	50V
C757	1-128-809-11	CERAMIC	100PF	5%	50V
C760	1-104-664-11	ELECT	47uF	20.00%	25V

Ref. No.	Part No.	Description			Remarks
C761	1-136-157-00	FILM	0.022uF	5.00%	50V
C770	1-128-813-11	CERAMIC	220PF	5%	50V
C800	1-162-302-11	CERAMIC	0.0022uF	20.00%	16V
C801	1-126-947-11	ELECT	47uF	20.00%	35V
C802	1-126-947-11	ELECT	47uF	20.00%	35V
C803	1-109-932-11	ELECT(BLOCK)	10000uF	20.00%	71V
C804	1-109-932-11	ELECT(BLOCK)	10000uF	20.00%	71V
C805	1-135-851-21	MYLAR	0.22uF		100V
C806	1-135-851-21	MYLAR	0.22uF		100V
C807	1-104-665-11	ELECT	100uF	20.00%	10V
C808	1-104-665-11	ELECT	100uF	20.00%	10V
C809	1-104-665-11	ELECT	100uF	20.00%	10V
C810	1-164-159-11	CERAMIC	0.1uF		50V
C825	1-164-159-11	CERAMIC	0.1uF		50V
C826	1-104-664-11	ELECT	47uF	20.00%	25V
C827	1-104-664-11	ELECT	47uF	20.00%	25V
C896	1-104-664-11	ELECT	47uF	20.00%	16V
C897	1-164-159-11	CERAMIC	0.1uF		50V
CC01	1-128-809-11	CERAMIC	100PF	5%	50V (EXCEPT US,CND)
CC02	1-128-809-11	CERAMIC	100PF	5%	50V (EXCEPT US,CND)
CC03	1-128-809-11	CERAMIC	100PF	5%	50V (EXCEPT US,CND)
CC04	1-128-809-11	CERAMIC	100PF	5%	50V (EXCEPT US,CND)
CC05	1-128-809-11	CERAMIC	100PF	5%	50V (EXCEPT US,CND)
CC06	1-128-809-11	CERAMIC	100PF	5%	50V (EXCEPT US,CND)
CC07	1-128-809-11	CERAMIC	100PF	5%	50V (EXCEPT US,CND)
CC08	1-128-809-11	CERAMIC	100PF	5%	50V (EXCEPT US,CND)
CC12	1-127-876-11	CERAMIC	0.01uF	10%	50V (EXCEPT US,CND)
CC14	1-127-876-11	CERAMIC	0.01uF	10%	50V (EXCEPT US,CND)
CC16	1-127-876-11	CERAMIC	0.01uF	10%	50V (EXCEPT US,CND)
CC18	1-127-876-11	CERAMIC	0.01uF	10%	50V (EXCEPT US,CND)
CC20	1-127-876-11	CERAMIC	0.01uF	10%	50V (EXCEPT US,CND)
CC31	1-128-809-11	CERAMIC	100PF	5%	50V (EXCEPT US,CND)
CC32	1-128-809-11	CERAMIC	100PF	5%	50V (EXCEPT US,CND)
CC41	1-128-809-11	CERAMIC	100PF	5%	50V (EXCEPT US,CND)
CC42	1-128-809-11	CERAMIC	100PF	5%	50V (EXCEPT US,CND)
CC51	1-128-809-11	CERAMIC	100PF	5%	50V (EXCEPT US,CND)
CC52	1-128-809-11	CERAMIC	100PF	5%	50V (EXCEPT US,CND)
CC53	1-128-809-11	CERAMIC	100PF	5%	50V (EXCEPT US,CND)
CC54	1-128-809-11	CERAMIC	100PF	5%	50V (EXCEPT US,CND)
CC55	1-128-809-11	CERAMIC	100PF	5%	50V (EXCEPT US,CND)
CC56	1-128-809-11	CERAMIC	100PF	5%	50V (EXCEPT US,CND)
CC57	1-128-809-11	CERAMIC	100PF	5%	50V (EXCEPT US,CND)
CC58	1-128-809-11	CERAMIC	100PF	5%	50V (EXCEPT US,CND)
CC61	1-128-809-11	CERAMIC	100PF	5%	50V (EXCEPT US,CND)
CC62	1-128-809-11	CERAMIC	100PF	5%	50V (EXCEPT US,CND)

< CONNECTOR >

Ref. No.	Part No.	Description
* CN791	1-564-706-11	PIN, CONNECTOR (SMALL TYPE) 4P
CN905	1-766-200-11	SOCKET, CONNECTOR PIN 5P
* CNP501	1-573-847-11	CONNECTOR, BOARD TO BOARD 15P
CNP502	1-784-038-11	CONNECTOR, BOARD TO BOARD 9P
* CNP801	1-564-242-00	PIN, CONNECTOR 5P (EXCEPT US,CND)
CNP802	1-691-767-11	PLUG (MICRO CONNECTOR) 5P
CNP911	1-784-930-11	PIN, CONNECTOR 15P
CNS501	1-569-315-11	SOCKET, CONNECTOR 5P

< DIODE >

Ref. No.	Part No.	Description
D505	8-719-911-19	DIODE 1SS133T-72
D510	8-719-911-19	DIODE 1SS133T-72
D540	8-719-911-19	DIODE 1SS133T-72
D560	8-719-911-19	DIODE 1SS133T-72
D605	8-719-911-19	DIODE 1SS133T-72
D610	8-719-911-19	DIODE 1SS133T-72
D640	8-719-911-19	DIODE 1SS133T-72
D665	8-719-911-19	DIODE 1SS133T-72
D680	8-719-911-19	DIODE 1SS133T-72
D705	8-719-911-19	DIODE 1SS133T-72
D710	8-719-911-19	DIODE 1SS133T-72
D721	8-719-911-19	DIODE 1SS133T-72
D722	8-719-911-19	DIODE 1SS133T-72
D731	8-719-911-19	DIODE 1SS133T-72
D732	8-719-911-19	DIODE 1SS133T-72
D733	8-719-911-19	DIODE 1SS133T-72
D734	8-719-911-19	DIODE 1SS133T-72
D740	8-719-911-19	DIODE 1SS133T-72
D750	8-719-911-19	DIODE 1SS133T-72
D765	8-719-911-19	DIODE 1SS133T-72
D791	8-719-911-19	DIODE 1SS133T-72
D801	8-719-934-21	DIODE HZS30-1LTA
D802	8-719-072-05	DIODE RBV-602LF-A
D804	8-719-160-26	DIODE HZ5.6BP-TK
D833	8-719-043-76	DIODE AK04V1
D896	8-719-043-76	DIODE AK04V1

< IC >

Ref. No.	Part No.	Description
IC201	8-759-827-92	IC M61511FP
IC401	8-759-636-74	IC M5218AP-22
IC501	8-749-011-16	IC STK350-230
IC601	8-759-636-74	IC M5218AP-22
IC701	8-759-326-52	IC uPC2581V
IC702	8-759-326-52	IC uPC2581V
IC801	8-759-605-00	IC M5F78M07L
IC802	8-759-604-95	IC M5F79M07L

MAIN

Ref. No.	Part No.	Description	Remarks
IC803	8-759-647-10	IC uPC2933HF	
IC804	8-759-701-65	IC NJM79M05FA	
IC806	8-759-376-91	IC uPC78M12AHF	
IC807	8-759-039-69	IC uPC7805AHF	
		< JACK >	
J401	1-779-380-11	JACK, PIN 6P (MULTI CH IN,AUX IN)	
J402	1-774-411-11	JACK, PIN 6P (CD IN, MD/TAPE OUT)	
J403	1-774-411-11	JACK, PIN 6P (MD/TAPE IN,TV/SAT IN,DVD/LD IN)	
J404	1-774-411-11	JACK, PIN 6P (VIDEO2 IN,VIDEO1 OUT,VIDEO1 IN)	
J405	1-774-843-11	JACK, PIN 1P (SUB WOOFER)	
		< COIL >	
L521	1-420-872-00	COIL, AIR-CORE	
L601	1-420-872-00	COIL, AIR-CORE	
L651	1-420-872-00	COIL, AIR-CORE	
L701	1-420-872-00	COIL, AIR-CORE	
L751	1-420-872-00	COIL, AIR-CORE	
		< TRANSISTOR >	
Q361	8-729-823-22	TRANSISTOR 2SC3576-AC	
Q362	8-729-823-22	TRANSISTOR 2SC3576-AC	
Q363	8-729-823-22	TRANSISTOR 2SC3576-AC	
Q364	8-729-823-22	TRANSISTOR 2SC3576-AC	
Q365	8-729-823-22	TRANSISTOR 2SC3576-AC	
Q366	8-729-823-22	TRANSISTOR 2SC3576-AC	
Q379	8-729-900-63	TRANSISTOR BN1F4M-TP	
Q471	8-729-823-22	TRANSISTOR 2SC3576-AC	
Q501	8-729-119-76	TRANSISTOR 2SA1115TP-EF	
Q502	8-729-141-30	TRANSISTOR 2SC3623ATP-LK	
Q503	8-749-010-25	TRANSISTOR MN2488-OPY-M	
Q504	8-749-010-26	TRANSISTOR MP1620-OPY-M	
Q505	8-729-140-82	TRANSISTOR 2SA988TP-PAFAEA	
Q506	8-729-140-82	TRANSISTOR 2SA988TP-PAFAEA	
Q540	8-729-281-53	TRANSISTOR 2SC1815GR-TPE2	
Q550	8-729-119-79	TRANSISTOR 2SC2785TP-FEK	
Q560	8-729-119-79	TRANSISTOR 2SC2785TP-FEK	
Q601	8-729-119-76	TRANSISTOR 2SA1115TP-EF	
Q602	8-729-141-30	TRANSISTOR 2SC3623ATP-LK	
Q603	8-749-010-25	TRANSISTOR MN2488-OPY-M	
Q604	8-749-010-26	TRANSISTOR MP1620-OPY-M	
Q605	8-729-140-82	TRANSISTOR 2SA988TP-PAFAEA	
Q606	8-729-140-82	TRANSISTOR 2SA988TP-PAFAEA	
Q610	8-729-119-79	TRANSISTOR 2SC2785TP-FEK	
Q640	8-729-281-53	TRANSISTOR 2SC1815GR-TPE2	
Q651	8-729-119-76	TRANSISTOR 2SA1115TP-EF	
Q652	8-729-141-30	TRANSISTOR 2SC3623ATP-LK	
Q653	8-749-010-25	TRANSISTOR MN2488-OPY-M	
Q654	8-749-010-26	TRANSISTOR MP1620-OPY-M	
Q655	8-729-140-82	TRANSISTOR 2SA988TP-PAFAEA	
Q656	8-729-140-82	TRANSISTOR 2SA988TP-PAFAEA	
Q680	8-729-281-53	TRANSISTOR 2SC1815GR-TPE2	
Q691	8-729-281-53	TRANSISTOR 2SC1815GR-TPE2	
Q692	8-729-900-63	TRANSISTOR BN1F4M-TP	
Q701	8-729-119-76	TRANSISTOR 2SA1115TP-EF	
Q702	8-729-141-30	TRANSISTOR 2SC3623ATP-LK	
Q703	8-749-010-25	TRANSISTOR MN2488-OPY-M	
Q704	8-749-010-26	TRANSISTOR MP1620-OPY-M	
Q705	8-729-140-82	TRANSISTOR 2SA988TP-PAFAEA	
Q706	8-729-140-82	TRANSISTOR 2SA988TP-PAFAEA	

Ref. No.	Part No.	Description	Remarks
Q710	8-729-119-79	TRANSISTOR 2SC2785TP-FEK	
Q722	8-729-140-84	TRANSISTOR 2SC1841TP-PAFAEA	
Q723	8-729-119-79	TRANSISTOR 2SC2785TP-FEK	
Q725	8-729-140-82	TRANSISTOR 2SA988TP-PAFAEA	
Q740	8-729-281-53	TRANSISTOR 2SC1815GR-TPE2	
Q747	8-729-900-63	TRANSISTOR BN1F4M-TP	
Q748	8-729-900-36	TRANSISTOR BA1F4M-TP	
Q750	8-729-281-53	TRANSISTOR 2SC1815GR-TPE2	
Q751	8-729-119-76	TRANSISTOR 2SA1115TP-EF	
Q752	8-729-141-30	TRANSISTOR 2SC3623ATP-LK	
Q753	8-749-010-25	TRANSISTOR MN2488-OPY-M	
Q754	8-749-010-26	TRANSISTOR MP1620-OPY-M	
Q755	8-729-140-82	TRANSISTOR 2SA988TP-PAFAEA	
Q756	8-729-140-82	TRANSISTOR 2SA988TP-PAFAEA	
Q790	8-729-119-79	TRANSISTOR 2SC2785TP-FEK	
Q801	8-729-140-97	TRANSISTOR 2SB734-T-34	
		< RESISTOR >	
R360	1-249-437-11	CARBON 47K 5% 1/4W	
R361	1-249-429-11	CARBON 10K 5% 1/4W	
R362	1-249-429-11	CARBON 10K 5% 1/4W	
R363	1-249-437-11	CARBON 47K 5% 1/4W	
R366	1-249-429-11	CARBON 10K 5% 1/4W	
R367	1-249-437-11	CARBON 47K 5% 1/4W	
R368	1-249-437-11	CARBON 47K 5% 1/4W	
R369	1-249-429-11	CARBON 10K 5% 1/4W	
R370	1-249-429-11	CARBON 10K 5% 1/4W	
R371	1-249-437-11	CARBON 47K 5% 1/4W	
R372	1-249-437-11	CARBON 47K 5% 1/4W	
R373	1-249-417-11	CARBON 1K 5% 1/4W	F
R374	1-249-417-11	CARBON 1K 5% 1/4W	F
R375	1-249-417-11	CARBON 1K 5% 1/4W	F
R376	1-249-417-11	CARBON 1K 5% 1/4W	F
R377	1-249-417-11	CARBON 1K 5% 1/4W	F
R378	1-249-417-11	CARBON 1K 5% 1/4W	F
R379	1-249-429-11	CARBON 10K 5% 1/4W	
R380	1-249-441-11	CARBON 100K 5% 1/4W	
R381	1-249-429-11	CARBON 10K 5% 1/4W	
R401	1-249-417-11	CARBON 1K 5% 1/4W	F
R402	1-249-417-11	CARBON 1K 5% 1/4W	F
R403	1-249-417-11	CARBON 1K 5% 1/4W	F
R404	1-249-417-11	CARBON 1K 5% 1/4W	F
R405	1-249-417-11	CARBON 1K 5% 1/4W	F
R406	1-249-417-11	CARBON 1K 5% 1/4W	F
R407	1-249-417-11	CARBON 1K 5% 1/4W	F
R408	1-249-417-11	CARBON 1K 5% 1/4W	F
R409	1-249-417-11	CARBON 1K 5% 1/4W	F
R411	1-249-417-11	CARBON 1K 5% 1/4W	F
R412	1-249-417-11	CARBON 1K 5% 1/4W	F
R413	1-249-437-11	CARBON 47K 5% 1/4W	
R414	1-249-437-11	CARBON 47K 5% 1/4W	
R415	1-249-437-11	CARBON 47K 5% 1/4W	
R416	1-249-437-11	CARBON 47K 5% 1/4W	
R417	1-249-437-11	CARBON 47K 5% 1/4W	
R418	1-249-437-11	CARBON 47K 5% 1/4W	
R419	1-249-437-11	CARBON 47K 5% 1/4W	
R420	1-249-437-11	CARBON 47K 5% 1/4W	
R421	1-249-437-11	CARBON 47K 5% 1/4W	

Ref. No.	Part No.	Description				Remarks
R422	1-249-437-11	CARBON	47K	5%	1/4W	
R423	1-249-437-11	CARBON	47K	5%	1/4W	
R424	1-249-437-11	CARBON	47K	5%	1/4W	
R425	1-249-437-11	CARBON	47K	5%	1/4W	
R426	1-249-437-11	CARBON	47K	5%	1/4W	
R427	1-249-437-11	CARBON	47K	5%	1/4W	
R431	1-249-417-11	CARBON	1K	5%	1/4W	F
R432	1-249-417-11	CARBON	1K	5%	1/4W	F
R435	1-249-437-11	CARBON	47K	5%	1/4W	
R436	1-249-437-11	CARBON	47K	5%	1/4W	
R441	1-249-437-11	CARBON	47K	5%	1/4W	
R442	1-249-437-11	CARBON	47K	5%	1/4W	
R443	1-249-437-11	CARBON	47K	5%	1/4W	
R444	1-249-437-11	CARBON	47K	5%	1/4W	
R445	1-249-437-11	CARBON	47K	5%	1/4W	
R446	1-249-437-11	CARBON	47K	5%	1/4W	
R447	1-249-437-11	CARBON	47K	5%	1/4W	
R451	1-249-417-11	CARBON	1K	5%	1/4W	F
R452	1-249-417-11	CARBON	1K	5%	1/4W	F
R453	1-249-417-11	CARBON	1K	5%	1/4W	F
R454	1-249-417-11	CARBON	1K	5%	1/4W	F
R455	1-249-417-11	CARBON	1K	5%	1/4W	F
R456	1-249-417-11	CARBON	1K	5%	1/4W	F
R457	1-249-417-11	CARBON	1K	5%	1/4W	F
R458	1-249-417-11	CARBON	1K	5%	1/4W	F
R459	1-249-417-11	CARBON	1K	5%	1/4W	F
R461	1-249-417-11	CARBON	1K	5%	1/4W	F
R462	1-249-417-11	CARBON	1K	5%	1/4W	F
R463	1-249-437-11	CARBON	47K	5%	1/4W	
R464	1-249-437-11	CARBON	47K	5%	1/4W	
R469	1-249-417-11	CARBON	1K	5%	1/4W	F
R470	1-249-437-11	CARBON	47K	5%	1/4W	
R471	1-249-417-11	CARBON	1K	5%	1/4W	F
R472	1-249-417-11	CARBON	1K	5%	1/4W	F
R473	1-249-421-11	CARBON	2.2K	5%	1/4W	F
R474	1-249-429-11	CARBON	10K	5%	1/4W	
R475	1-249-421-11	CARBON	2.2K	5%	1/4W	F
R499	1-249-437-11	CARBON	47K	5%	1/4W	
R501	1-249-417-11	CARBON	1K	5%	1/4W	F
R502	1-249-439-11	CARBON	68K	5%	1/4W	
R503	1-249-418-11	CARBON	1.2K	5%	1/4W	F
R504	1-249-411-11	CARBON	330	5%	1/4W	
R505	1-249-439-11	CARBON	68K	5%	1/4W	
R510	1-249-421-11	CARBON	2.2K	5%	1/4W	F
R511	1-249-440-11	CARBON	82K	5%	1/4W	
R513	1-249-414-11	CARBON	560	5%	1/4W	F
⚠R514	1-249-408-11	CARBON	180	5%	1/4W	F
⚠R515	1-249-408-11	CARBON	180	5%	1/4W	F
⚠R516	1-234-182-11	ENCAPSULATED COMPONENT				
⚠R517	1-249-393-11	CARBON	10	5%	1/4W	F
R520	1-249-425-11	CARBON	4.7K	5%	1/4W	F
R521	1-249-417-11	CARBON	1K	5%	1/4W	F
R522	1-249-419-11	CARBON	1.5K	5%	1/4W	F
R524	1-249-431-11	CARBON	15K	5%	1/4W	
R525	1-247-881-00	CARBON	120K	5%	1/4W	
⚠R528	1-249-389-11	CARBON	4.7	5%	1/4W	F
R531	1-249-425-11	CARBON	4.7K	5%	1/4W	F
R532	1-249-425-11	CARBON	4.7K	5%	1/4W	F
R533	1-249-437-11	CARBON	47K	5%	1/4W	
⚠R534	1-249-389-11	CARBON	4.7	5%	1/4W	F
R540	1-247-866-11	CARBON	30K	5%	1/4W	
R555	1-249-433-11	CARBON	22K	5%	1/4W	
R556	1-249-433-11	CARBON	22K	5%	1/4W	
R557	1-249-431-11	CARBON	15K	5%	1/4W	
R573	1-249-437-11	CARBON	47K	5%	1/4W	
R601	1-249-417-11	CARBON	1K	5%	1/4W	F
R602	1-249-439-11	CARBON	68K	5%	1/4W	
R603	1-249-418-11	CARBON	1.2K	5%	1/4W	F
R604	1-249-439-11	CARBON	68K	5%	1/4W	
R610	1-249-421-11	CARBON	2.2K	5%	1/4W	F
R611	1-249-440-11	CARBON	82K	5%	1/4W	
R613	1-249-414-11	CARBON	560	5%	1/4W	F
⚠R614	1-249-408-11	CARBON	180	5%	1/4W	F
⚠R615	1-249-408-11	CARBON	180	5%	1/4W	F
⚠R616	1-234-182-11	ENCAPSULATED COMPONENT				
⚠R617	1-249-393-11	CARBON	10	5%	1/4W	F
⚠R618	1-249-389-11	CARBON	4.7	5%	1/4W	F
R620	1-249-425-11	CARBON	4.7K	5%	1/4W	F
R621	1-247-850-11	CARBON	6.2K	5%	1/4W	
R622	1-249-419-11	CARBON	1.5K	5%	1/4W	F
R623	1-249-437-11	CARBON	47K	5%	1/4W	
R624	1-249-431-11	CARBON	15K	5%	1/4W	
R625	1-247-881-00	CARBON	120K	5%	1/4W	
R631	1-249-425-11	CARBON	4.7K	5%	1/4W	F
⚠R634	1-249-389-11	CARBON	4.7	5%	1/4W	F
R638	1-247-881-00	CARBON	120K	5%	1/4W	
R640	1-247-866-11	CARBON	30K	5%	1/4W	
R651	1-249-417-11	CARBON	1K	5%	1/4W	F
R652	1-249-439-11	CARBON	68K	5%	1/4W	
R653	1-249-418-11	CARBON	1.2K	5%	1/4W	F
R654	1-249-439-11	CARBON	68K	5%	1/4W	
R655	1-249-433-11	CARBON	22K	5%	1/4W	
R656	1-249-433-11	CARBON	22K	5%	1/4W	
R657	1-249-431-11	CARBON	15K	5%	1/4W	
R660	1-249-421-11	CARBON	2.2K	5%	1/4W	F
R661	1-249-440-11	CARBON	82K	5%	1/4W	
R663	1-249-414-11	CARBON	560	5%	1/4W	F
⚠R664	1-249-408-11	CARBON	180	5%	1/4W	F
⚠R665	1-249-408-11	CARBON	180	5%	1/4W	F
⚠R666	1-234-182-11	ENCAPSULATED COMPONENT				
⚠R667	1-249-393-11	CARBON	10	5%	1/4W	F
⚠R668	1-249-389-11	CARBON	4.7	5%	1/4W	F
R669	1-249-425-11	CARBON	4.7K	5%	1/4W	F
R671	1-247-850-11	CARBON	6.2K	5%	1/4W	
R672	1-249-419-11	CARBON	1.5K	5%	1/4W	F
R673	1-249-437-11	CARBON	47K	5%	1/4W	
R674	1-249-431-11	CARBON	15K	5%	1/4W	
R675	1-249-433-11	CARBON	22K	5%	1/4W	
R676	1-249-433-11	CARBON	22K	5%	1/4W	
R677	1-249-431-11	CARBON	15K	5%	1/4W	
R680	1-247-866-11	CARBON	30K	5%	1/4W	
R691	1-215-888-00	METAL OXIDE	220	5%	2W	
R692	1-215-888-00	METAL OXIDE	220	5%	2W	
R693	1-249-429-11	CARBON	10K	5%	1/4W	
R694	1-249-429-11	CARBON	10K	5%	1/4W	
R695	1-249-434-11	CARBON	27K	5%	1/4W	

The components identified by mark ⚠ or dotted line with mark ⚠ are critical for safety. Replace only with part number specified.	Les composants identifiés par une marque ⚠ sont critiques pour la sécurité. Ne les remplacer que par une pièce portant le numéro spécifié.	以阴影和 ⚠ 标志来识别的零部件，在安全方面具有关键性，因此只能以规定号码的零部件来更换。

MAIN POWER SWITCH

Ref. No.	Part No.	Description			Remarks
R696	1-249-429-11	CARBON	10K	5%	1/4W
R697	1-249-441-11	CARBON	100K	5%	1/4W
R698	1-249-429-11	CARBON	10K	5%	1/4W
R701	1-249-417-11	CARBON	1K	5%	1/4W F
R702	1-249-439-11	CARBON	68K	5%	1/4W
R703	1-249-418-11	CARBON	1.2K	5%	1/4W F
R704	1-249-439-11	CARBON	68K	5%	1/4W
R710	1-249-421-11	CARBON	2.2K	5%	1/4W F
R711	1-249-440-11	CARBON	82K	5%	1/4W
R713	1-249-414-11	CARBON	560	5%	1/4W F
⚠R714	1-249-409-11	CARBON	220	5%	1/4W F
⚠R715	1-249-409-11	CARBON	220	5%	1/4W F
⚠R716	1-234-182-11	ENCAPSULATED COMPONENT			
⚠R717	1-249-393-11	CARBON	10	5%	1/4W F
⚠R718	1-249-389-11	CARBON	4.7	5%	1/4W F
R719	1-249-425-11	CARBON	4.7K	5%	1/4W F
R721	1-247-850-11	CARBON	6.2K	5%	1/4W
R722	1-249-419-11	CARBON	1.5K	5%	1/4W F
R723	1-249-437-11	CARBON	47K	5%	1/4W
R724	1-249-431-11	CARBON	15K	5%	1/4W
R725	1-247-881-00	CARBON	120K	5%	1/4W
R731	1-249-425-11	CARBON	4.7K	5%	1/4W F
⚠R732	1-249-381-11	CARBON	1	5%	1/4W F
⚠R733	1-249-381-11	CARBON	1	5%	1/4W F
⚠R734	1-249-389-11	CARBON	4.7	5%	1/4W F
R735	1-249-427-11	CARBON	6.8K	5%	1/4W F
R736	1-249-417-11	CARBON	1K	5%	1/4W F
R737	1-249-436-11	CARBON	39K	5%	1/4W
R740	1-247-866-11	CARBON	30K	5%	1/4W
R742	1-249-437-11	CARBON	47K	5%	1/4W
R743	1-249-433-11	CARBON	22K	5%	1/4W
R744	1-249-433-11	CARBON	22K	5%	1/4W
R745	1-249-433-11	CARBON	22K	5%	1/4W
R746	1-249-433-11	CARBON	22K	5%	1/4W
R747	1-249-431-11	CARBON	15K	5%	1/4W
R750	1-247-866-11	CARBON	30K	5%	1/4W
R751	1-249-417-11	CARBON	1K	5%	1/4W F
R752	1-249-439-11	CARBON	68K	5%	1/4W
R753	1-249-418-11	CARBON	1.2K	5%	1/4W F
R754	1-249-439-11	CARBON	68K	5%	1/4W
R755	1-249-433-11	CARBON	22K	5%	1/4W
R756	1-249-433-11	CARBON	22K	5%	1/4W
R757	1-249-431-11	CARBON	15K	5%	1/4W
R760	1-249-421-11	CARBON	2.2K	5%	1/4W F
R761	1-249-440-11	CARBON	82K	5%	1/4W
R763	1-249-414-11	CARBON	560	5%	1/4W F
⚠R764	1-249-409-11	CARBON	220	5%	1/4W F
⚠R765	1-249-409-11	CARBON	220	5%	1/4W F
⚠R766	1-234-182-11	ENCAPSULATED COMPONENT			
⚠R767	1-249-393-11	CARBON	10	5%	1/4W F
⚠R768	1-249-389-11	CARBON	4.7	5%	1/4W F
R769	1-249-425-11	CARBON	4.7K	5%	1/4W F
R771	1-247-850-11	CARBON	6.2K	5%	1/4W
R772	1-249-419-11	CARBON	1.5K	5%	1/4W F
R773	1-249-437-11	CARBON	47K	5%	1/4W
R775	1-247-881-00	CARBON	120K	5%	1/4W
R778	1-249-431-11	CARBON	15K	5%	1/4W
R791	1-249-425-11	CARBON	4.7K	5%	1/4W F
R792	1-215-868-00	METAL OXIDE	680	5%	1W
⚠R793	1-249-389-11	CARBON	4.7	5%	1/4W F
R794	1-215-868-00	METAL OXIDE	680	5%	1W
R801	1-240-877-11	FUSIBLE	0.15	5%	1/2W
⚠R802	1-249-381-11	CARBON	1	5%	1/4W F
⚠R803	1-249-389-11	CARBON	4.7	5%	1/4W F
R804	1-249-426-11	CARBON	5.6K	5%	1/4W
⚠RR11	1-249-393-11	CARBON	10	5%	1/4W F (EXCEPT US,CND)
⚠RR12	1-249-393-11	CARBON	10	5%	1/4W F (EXCEPT US,CND)
⚠RR13	1-249-393-11	CARBON	10	5%	1/4W F (EXCEPT US,CND)
⚠RR14	1-249-393-11	CARBON	10	5%	1/4W F (EXCEPT US,CND)
⚠RR15	1-249-393-11	CARBON	10	5%	1/4W F (EXCEPT US,CND)
		< RELAY >			
RY501	1-755-170-11	RELAY (12V)			
RY560	1-755-267-11	RELAY			
RY601	1-755-170-11	RELAY (12V)			
RY701	1-755-170-11	RELAY (12V)			
RY791	1-755-170-11	RELAY (12V)			
		< TERMINAL >			
TM601	1-694-431-21	TERMINAL BOARD(SPEAKER SURROUND,CENTER)			
TM602	1-694-791-11	TERMINAL BOARD (SPEAKER FRONT)			
**********					
	1-680-528-11	POWER SWITCH BOARD **********			
	1-533-293-11	FUSE HOLDER			
		< CONNECTOR >			
* CN104	1-564-519-11	PLUG, CONNECTOR 4P			
		< RESISTOR >			
R132	1-249-433-11	CARBON	22K	5%	1/4W
R133	1-249-437-11	CARBON	47K	5%	1/4W
		< SWITCH >			
S136	1-762-875-21	SWITCH, TACTILE (DISPLAY)			
S137	1-762-875-21	SWITCH, TACTILE (DIMMER)			
S138	1-762-875-21	SWITCH, TACTILE (I/⏻)			
S139	1-762-875-21	SWITCH, TACTILE (SPEAKER)			
**********					

The components identified by mark ⚠ or dotted line with mark ⚠ are critical for safety. Replace only with part number specified.	Les composants identifiés par une marque ⚠ sont critiques pour la sécurité. Ne les remplacer que par une pièce portant le numéro spécifié.	以阴影和 ⚠ 标志来识别的零部件，在安全方面具有关键性，因此只能以规定号码的零部件来更换。

STBY **S-VIDEO**

Ref. No.	Part No.	Description				Remarks
	A-4475-803-A	STBY BOARD, COMPLETE (US,CND) **********				
	A-4475-887-A	STBY BOARD, COMPLETE (AEP,UK,MY,SP) **********				
	A-4475-947-A	STBY BOARD, COMPLETE (AUS) **********				
	A-4475-946-A	STBY BOARD, COMPLETE (CH) **********				
	A-4475-881-A	STBY BOARD, COMPLETE (E) **********				
	A-4476-951-A	STBY BOARD, COMPLETE (MX) **********				
	A-4476-954-A	STBY BOARD, COMPLETE (AR) **********				
	A-4476-944-A	STBY BOARD, COMPLETE (KR) **********				
	A-4475-942-A	STBY BOARD, COMPLETE (TW) **********				
		< CAPACITOR >				
C813	1-164-159-11	CERAMIC	0.1uF		50V	
C814	1-164-159-11	CERAMIC	0.1uF		50V	
C815	1-126-943-11	ELECT	2200uF	20.00%	25V	
C816	1-126-941-11	ELECT	470uF	20.00%	25V	
C898	1-126-949-11	ELECT	220uF	20.00%	35V	
C899	1-126-948-11	ELECT	100uF	20.00%	35V	(EXCEPT TW)
C920	1-164-159-11	CERAMIC	0.1uF		50V	
C921	1-164-159-11	CERAMIC	0.1uF		50V	
C950	1-126-936-11	ELECT	3300uF	20.00%	16V	
		< CONNECTOR >				
CNP901	1-564-321-00	PIN, CONNECTOR 2P				
* CNP902	1-565-792-11	PIN, CONNECTOR 2P				
CNP903	1-564-506-11	PLUG, CONNECTOR 3P				
CNP905	1-766-203-11	PLUG,CONNECTOR PIN(PC BOARD)5P				
CNP912	1-784-921-11	PIN, CONNECTOR 4P				
		< DIODE >				
D820	8-719-024-99	DIODE 11ES2-NTA2B				
D821	8-719-024-99	DIODE 11ES2-NTA2B				
D822	8-719-024-99	DIODE 11ES2-NTA2B				
D823	8-719-024-99	DIODE 11ES2-NTA2B				
D898	8-719-024-99	DIODE 11ES2-NTA2B				
D899	8-719-024-99	DIODE 11ES2-NTA2B				
D901	8-719-911-19	DIODE 1SS133T-72				
D910	8-719-024-99	DIODE 11ES2-NTA2B				
D911	8-719-024-99	DIODE 11ES2-NTA2B				
D912	8-719-024-99	DIODE 11ES2-NTA2B				
D913	8-719-024-99	DIODE 11ES2-NTA2B				
D914	8-719-911-19	DIODE 1SS133T-72				
D915	8-719-911-19	DIODE 1SS133T-72				
		< FUSE >				
⚠F901	1-576-193-11	FUSE (6.3A/125V) (US,CND,TW,MX)				
⚠F901	1-533-464-11	FUSE, TIME-LUG (T2.5AL/250V)				(EXCEPT US,CND,TW,MX)
⚠F902	1-532-464-31	FUSE, TIME-LUG (T2.5AL/250V)				(AEP,UK,MY,SP,AR,AUS)
		< EARTH >				
* G901	1-537-738-21	TERMINAL, EARTH (US,CND)				

Ref. No.	Part No.	Description				Remarks
		< JACK >				
⚠J911	1-785-834-11	OUTLET (1P)(AC OUTLET)(EXCEPT KR,AUS)				
⚠J911	1-251-417-11	OUTLET, A.C. (AC OUTLET) (AUS)				
		< TRANSISTOR >				
Q901	8-729-119-79	TRANSISTOR	2SC2785TP-FEK			
		< RESISTOR >				
⚠R810	1-240-877-11	FUSIBLE	0.15	5%	1/2W	
⚠R811	1-240-877-11	FUSIBLE	0.15	5%	1/2W	
⚠R812	1-240-877-11	FUSIBLE	0.15	5%	1/2W	
⚠R901	1-202-725-00	SOLID	3.3M	10%	1/2W	(US,CND)
R902	1-249-437-11	CARBON	47K	5%	1/4W	
R903	1-249-425-11	CARBON	4.7K	5%	1/4W	F
⚠R904	1-249-381-11	CARBON	1	5%	1/4W	F
		< RELAY >				
⚠RY901	1-755-298-11	RELAY				
		< TRANSFORMER >				
⚠T902	1-435-436-11	TRANSFORMER, POWER (US,CND,MX)				
⚠T902	1-435-435-11	TRANSFORMER, POWER				(AEP,UK,MY,SP,KR,AR,CH,AUS)
⚠T902	1-435-563-11	TRANSFORMER, POWER (TW)				
⚠T902	1-435-283-11	TRANSFORMER, POWER (E)				
**********						
	1-680-538-11	S-VIDEO BOARD **********				
		< CAPACITOR >				
C1801	1-163-038-11	CERAMIC CHIP	0.1uF		25V	(US,CND,MX)
C1802	1-163-038-11	CERAMIC CHIP	0.1uF		25V	
C1803	1-163-038-11	CERAMIC CHIP	0.1uF		25V	
C1804	1-126-964-11	ELECT	10uF	20.00%	50V	
C1805	1-126-964-11	ELECT	10uF	20.00%	50V	
C1806	1-163-038-11	CERAMIC CHIP	0.1uF		25V	
C1807	1-163-038-11	CERAMIC CHIP	0.1uF		25V	
C1808	1-126-960-11	ELECT	1uF	20.00%	50V	
C1809	1-163-038-11	CERAMIC CHIP	0.1uF		25V	
C1810	1-126-960-11	ELECT	1uF	20.00%	50V	
C1811	1-163-038-11	CERAMIC CHIP	0.1uF		25V	
C1812	1-162-923-11	CERAMIC CHIP	47PF	5%	50V	
C1813	1-162-923-11	CERAMIC CHIP	47PF	5%	50V	
C1814	1-126-960-11	ELECT	1uF	20.00%	50V	
C1815	1-163-038-11	CERAMIC CHIP	0.1uF		25V	(US,CND,MX)
C1816	1-162-923-11	CERAMIC CHIP	47PF	5%	50V	
C1817	1-162-923-11	CERAMIC CHIP	47PF	5%	50V	
C1818	1-162-971-11	CERAMIC CHIP	0.001uF	10.00%	50V	
C1819	1-162-971-11	CERAMIC CHIP	0.001uF	10.00%	50V	
		< CONNECTOR >				
CNS59	1-568-442-11	SOCKET, CONNECTOR 9P				

The components identified by mark ⚠ or dotted line with mark ⚠ are critical for safety. Replace only with part number specified.	Les composants identifiés par une marque ⚠ sont critiques pour la sécurité. Ne les remplacer que par une pièce portant le numéro spécifié.	以阴影和 ⚠ 标志来识别的零部件，在安全方面具有关键性，因此只能以规定号码的零部件来更换。

S-VIDEO VIDEO

Ref. No.	Part No.	Description				Remarks
		< DIODE >				
D1801	8-719-070-30	DIODE PTZ-TE25-5.6A				
D1802	8-719-016-74	DIODE 1SS352-TPH3				
D1803	8-719-016-74	DIODE 1SS352-TPH3				
		< IC >				
IC1801	8-759-333-84	IC NJM2279D				
IC1802	8-759-333-84	IC NJM2279D				
		< JACK >				
J1801	1-563-330-11	JACK (CTRL A1 II)(US,CND,MX)				
J1802	1-764-676-11	CONNECTOR (ROUND TYPE) (TV/SAT IN,DVD/LD IN)				
J1803	1-764-676-11	CONNECTOR (ROUND TYPE) (VIDEO1 IN,VIDEO1 OUT)				
J1804	1-537-943-11	TERMINAL, S (MONITOR OUT)				
		< JUMPER RESISTOR >				
JR1804	1-216-295-11	SHORT	0			
JR1805	1-216-295-11	SHORT	0			
JR1806	1-216-295-11	SHORT	0			
JR1807	1-216-295-11	SHORT	0			
JR1808	1-216-295-11	SHORT	0			
JR1810	1-216-295-11	SHORT	0			
		< RESISTOR >				
R1801	1-216-022-00	METAL CHIP	75	5%	1/10W	
R1802	1-216-022-00	METAL CHIP	75	5%	1/10W	
R1803	1-216-022-00	METAL CHIP	75	5%	1/10W	
R1804	1-216-022-00	METAL CHIP	75	5%	1/10W	
R1805	1-216-022-00	METAL CHIP	75	5%	1/10W	
R1806	1-216-022-00	METAL CHIP	75	5%	1/10W	
R1807	1-216-022-00	METAL CHIP	75	5%	1/10W	
R1808	1-216-022-00	METAL CHIP	75	5%	1/10W	
R1809	1-216-022-00	METAL CHIP	75	5%	1/10W	
R1810	1-216-022-00	METAL CHIP	75	5%	1/10W	

****

	1-680-533-11	VIDEO BOARD				
		**********				
		< CAPACITOR >				
C200	1-128-805-11	CERAMIC	47PF	5%	50V	
C201	1-128-805-11	CERAMIC	47PF	5%	50V	
C206	1-126-960-11	ELECT	1uF	20.00%	50V	
C207	1-126-960-11	ELECT	1uF	20.00%	50V	
C208	1-126-960-11	ELECT	1uF	20.00%	50V	
C209	1-126-960-11	ELECT	1uF	20.00%	50V	
C210	1-126-964-11	ELECT	10uF	20.00%	50V	
C213	1-126-964-11	ELECT	10uF	20.00%	50V	
C214	1-164-159-11	CERAMIC	0.1uF		50V	
C215	1-164-159-11	CERAMIC	0.1uF		50V	
C248	1-128-825-11	CERAMIC	2200PF	5%	50V	
C249	1-128-825-11	CERAMIC	2200PF	5%	50V	

Ref. No.	Part No.	Description				Remarks
		< CONNECTOR >				
CNS150	1-568-439-11	SOCKET, CONNECTOR 7P				
CNS151	1-569-315-11	SOCKET, CONNECTOR 5P				
CNS152	1-568-442-11	SOCKET, CONNECTOR 9P				
		< DIODE >				
D203	8-719-911-19	DIODE 1SS133T-72				
D204	8-719-911-19	DIODE 1SS133T-72				
		< IC >				
IC103	8-759-529-20	IC NJM2296D				
		< JACK >				
J201	1-770-337-11	JACK, PIN 3P (VIDEO2 IN,DVD/LD IN,TV/SAT,IN)				
J202	1-770-337-11	JACK, PIN 3P (MONITOR OUT,VIDEO1 IN, VIDEO1 OUT)				
		< RESISTOR >				
R200	1-247-804-11	CARBON	75	5%	1/4W	
R201	1-247-804-11	CARBON	75	5%	1/4W	
R218	1-247-804-11	CARBON	75	5%	1/4W	
R219	1-247-804-11	CARBON	75	5%	1/4W	
R220	1-247-804-11	CARBON	75	5%	1/4W	
R221	1-247-804-11	CARBON	75	5%	1/4W	

****

		MISCELLANEOUS
		**********
7	1-773-250-11	WIRE (FLAT TYPE) (27 CORE)
55	1-769-844-11	WIRE (FLAT TYPE) (5 CORE)
57	1-765-314-11	WIRE (FLAT TYPE) (7 CORE)
59	1-693-539-11	TUNER (US,CND,E,TW,MX,AR)
59	1-693-540-11	TUNER (AEP,UK,MY,SP,KR,AUS,CH)
60	1-773-004-11	WIRE (FLAT TYPE) (15 CORE)
61	1-769-905-11	WIRE (FLAT TYPE) (9 CORE)
⚠68	1-696-847-11	CORD, POWER (AUS)
⚠68	1-769-079-21	CORD, POWER (KR
⚠68	1-777-071-21	CORD, POWER (AEP,UK,E,MY,SP,TW,AR)
⚠68	1-783-205-11	CORD, POWER (CH)
⚠68	1-783-820-11	CORD, POWER (US,CND,MX)
⚠T901	1-435-897-11	POWER TRANSFORMER (US)
⚠T901	1-435-898-11	POWER TRANSFORMER (CND)
⚠T901	1-435-899-11	POWER TRANSFORMER (TW)
⚠T901	1-435-900-11	POWER TRANSFORMER (KR,AR)
⚠T901	1-435-901-11	POWER TRANSFORMER (E)
⚠T901	1-435-902-11	POWER TRANSFORMER (AUS)
⚠T901	1-435-903-11	POWER TRANSFORMER (AEP,UK,MY,SP,CH)
FL101	1-518-718-11	INDICATOR TUBE, FLUORESCENT

The components identified by mark ⚠ or dotted line with mark ⚠ are critical for safety. Replace only with part number specified.	Les composants identifiés par une marque ⚠ sont critiques pour la sécurité. Ne les remplacer que par une pièce portant le numéro spécifié.	以阴影和 ⚠ 标志来识别的零部件，在安全方面具有关键性，因此只能以规定号码的零部件来更换。

Ref. No.	Part No.	Description	Remarks
		ACCESSORIES & PACKING MATERIALS **********	
	1-501-374-11	ANTENNA, LOOP (AM)	
	1-793-184-21	CONNECTOR (F TYPE ADAPTOR)	
	3-866-670-11	MANUAL,COMMONNESS INSTRUCTION (ENGLISH)(US,UK,AUS)	
	3-866-670-21	MANUAL,COMMONNESS INSTRUCTION (ENGLISH, FRENCH, GERMAN, SPANISH,DUTCH, PORTUGUESE, SWEDISH, ITALIAN, CHINESE) (CND,AEP,E,MY,SP,TW,MX,AR)	
	3-866-670-31	MANUAL,COMMONNESS INSTRUCTION (DANISH, FINNISH, SWEDISH)(AEP)	
	3-866-670-41	MANUAL,COMMONNESS INSTRUCTION (ENGLISH, ARABIC, CHINISE)(CH)	
	3-866-670-51	MANUAL,COMMONNESS INSTRUCTION (ENGLISH, POLISH, RUSSIAN)(AEP)	
	3-866-670-61	MANUAL,COMMONNESS INSTRUCTION (HANGARIAN, CZECH, TURDISH, GREEK)(AEP)	
	4-233-598-11	INSTRUCTION MANUAL (ENGLISH)(US,CND)	
	4-233-598-21	INSTRUCTION MANUAL (ENGLISH)(CND)	
	4-233-598-31	INSTRUCTION MANUAL (ENGLISH)(E,MY,SP,TW,AUS,CH)	
	4-233-598-41	INSTRUCTION MANUAL (FRENCH, SPANISH)(E,MY,SP)	
	4-233-598-51	INSTRUCTION MANUAL (CHINESE)(E,MY,SP,TW)	
	4-233-598-61	INSTRUCTION MANUAL (ENGLISH,CHINESE)(CH)	
	4-233-598-71	INSTRUCTION MANUAL (ENGLISH)(AEP,UK)	
	4-233-598-81	INSTRUCTION MANUAL (FRENCH, DUTCH, SWEDISH)(AEP)	
	4-233-598-91	INSTRUCTION MANUAL (GERMAN, SPANISH)(AEP)	
	4-233-599-11	INSTRUCTION MANUAL (ITALIAN, POLISH)(AEP)	
	4-233-599-21	INSTRUCTION MANUAL (KOREAN)(KR)	
	4-233-599-31	INSTRUCTION MANUAL (ENGLISH, SPANISH)(MX,AR)	
	1-476-552-11	COMMANDER, STANDARD (RM-U305) (EXCEPT US, CND)	
	1-476-606-11	REMOTE COMMANDER (RM-PP505)(US,CND)	
	4-228-696-01	COVER, BATTERY (FOR RM-U305)(EXCEPT US, CND)	
	4-983-536-11	COVER, BATTERY (FOR RM-PP505)(US,CND)	

REVISION HISTORY

Clicking the version allows you to jump to the revised page.
Also, clicking the version at the upper right on the revised page allows you to jump to the next revised page.

Ver.	Date	Description of Revision
1.0	2001.03	New